МИНИСТЕРСТВО ОБРАЗОВАНИЯ И НАУКИ РОССИЙСКОЙ ФЕДЕРАЦИИ

ФЕДЕРАЛЬНОЕ ГОСУДАРСТВЕННОЕ БЮДЖЕТНОЕ ОБРАЗОВАТЕЛЬНОЕ УЧРЕЖДЕНИЕ ВЫСШЕГО ОБРАЗОВАНИЯ «ДОНСКОЙ ГОСУДАРСТВЕННЫЙ ТЕХНИЧЕСКИЙ УНИВЕРСИТЕТ»

АВИАЦИОННЫЙ КОЛЛЕДЖ

МЕТОДИЧЕСКИЕ УКАЗАНИЯ ДЛЯ ИЗУЧЕНИЯ ИНОСТРАННОГО ЯЗЫКА В ПРОФЕССИОНАЛЬНОЙ ДЕЯТЕЛЬНОСТИ

Ростов-на-Дону
ДГТУ
2018

УДК

Составитель: М.Н. Гаврилова Е.А. Владимирова

Методические указания для изучения иностранного языка в профессиональной деятельности – Ростов-на-Дону: Донской гос. техн. ун-т, 2018. – 82 с.

Содержат тексты для чтения из различных источников с типовыми заданиями согласно тематике рабочей программы по иностранному языку.

Предназначены для студентов специальности 15.02.08 Технология машиностроения очной и заочной форм обучения.

УДК

Печатается по решению редакционно-издательского совета
Донского государственного технического университета

Научный редактор директор колледжа, к.т.н., доцент А.И. Азарова

Ответственный за выпуск председатель цикловой комиссии
общегуманитарных и социально-экономических дисциплин Г.А. Пуленко

В печать ___ · ___ · 20___ г.
Формат Объем ___ усл. п.л.
Тираж ___ зкз. Заказ № ___.

Издательский центр ДГТУ
Адрес университета и полиграфического предприятия:
344000, г. Ростов-на-Дону, пл. Гагарина, 1

СОДЕРЖАНИЕ

ВВЕДЕНИЕ

Учебная дисциплина «Иностранный язык» является частью программы подготовки специалистов среднего звена в соответствии с ФГОС 3+ по специальности СПО 15.02.08 Технология машиностроения.

В предлагаемых методических указаниях содержатся тексты для чтения из различных источников с типовыми заданиями согласно тематике рабочей программы по иностранному языку.

При составлении методических указаний преследовалась основная цель - подвести студентов к чтению и пониманию оригинальной литературы по специальности. Данные технические тексты написаны доступным языком с высокой повторяемостью лексического материала. Преподаватель свободен в выборе упражнений к текстам в зависимости от уровня подготовленности студенческой группы.

TOPIC 1. FAMOUS SCIENTISTS

Text 1

1. Прочитайте слова по транскрипции:
   chemistry |ˈkɛmɪstri|, chemical |ˈkɛmɪk(ə)l|, gymnasium |dʒɪmˈneɪzɪəm|, theses |ˈθiːsiːz|, scientific |sʌɪənˈtɪfɪk|, physics |ˈfɪzɪks|.

2. Обратите внимание на перевод следующих слов и словосочетаний:
   generalization - обобщение;
   the Periodic Table of Elements - периодическая таблица элементов;
   secondary education - среднее образование
   graduate - окончить высшее учебное заведение;
   theses - диссертация;
   master's degree - степень магистра;
   scientific commission - научная комиссия;
   Karlsruhe - г. Карлсруэ (ФРГ);
   carry on - продолжать;
   be appointed - быть назначенным;
   Bureau of Weights and Measures - Главная палата мер и весов (в 1931 году Палата была реорганизована в Институт метрологии и стандартизации, с 1934 года - институт метрологии, ныне - Всероссийский научно-исследовательский институт метрологии имени Д. И. Менделеева);
   «Contribution to the Knowledge of Russia» - «К познанию России»;
   profound thoughts - глубокие мысли;
   prominent works - выдающиеся работы;
   «Principles of Chemistry» - «Основы химии»;
   embrace - охватывать.

3. Прочитайте текст и переведите при помощи словаря незнакомые слова и словосочетания.

4. Прочитайте и переведите весь текст:

D. MENDELEYEV

The father of one of the greatest generalization in chemistry — the Periodic Table of Elements—Dmitry Ivanovich Mendeleyev, was born in 1834 in the town of Tobolsk (Siberia), in the family of the director of the town Gymnasium. He received a secondary education at the Tobolsk Gymnasium and then entered the Petersburg Pedagogical Institute,

from which he graduated with a gold medal in 1857. After graduation he worked as a teacher for two years, first in the Simferopol and then Odessa Gymnasium.

In 1859 he presented his theses, received his master's degree and then went abroad on a two year scientific commission, during which he took part in the World Chemical Congress in Karlsruhe (1860). Upon his return to Odessa he was elected professor of the Petersburg Technological Institute and two years later professor of the Petersburg University where he carried on his scientific and pedagogical activities for twenty-three years. In 1893 Mendeleyev was appointed Director of the Bureau of Weights and Measures. At the same time he carried on a great deal of scientific and literary work. In 1906 he issued a book under the title «Contribution to the Knowledge of Russia» which contained profound thoughts as to the trends for the further development of Russian industry and the Russian national economy. The greatest result of Mendeleyev's creative effort was the discovery of the Periodic Law and the drawing up of the Periodic Table of Elements.

One of Mendeleyev's prominent works is his book «Principles of Chemistry» in which inorganic chemistry was for the first time explained from the standpoint of the Periodic Law. His works embrace various fields of science—chemistry, physics, physical chemistry, geophysics.

5. Ответьте на вопросы:

1. Who discovered the Periodic Law? 2. When and where was D. Mendeleyev born? 3. Where did Mendeleyev work? 4. What books did Mendeleyev write? 5. What fields of science did he work in?

Text 2

1. Прочитайте слова по транскрипции:

thoughtful |ˈθɔːtfʊl|, inquisitive |ɪnˈkwɪzɪtɪv|, encyclopedia |ɛnˌsʌɪklə(ʊ)ˈpiːdɪə|, experiments |ɪkˈspɛrɪmənts|, laboratory |ləˈbɒrəˌt(ə)ri|, phosphorus |ˈfɒsf(ə)rəs| apparatus |ˌapəˈreɪtəs|.

2. Обратите внимание на перевод следующих слов и словосочетаний:

thoughtful - вдумчивый;
inquisitive - любознательный, пытливый;
newsboy - газетчик, разносчик газет;
gratitude - благодарность, признательность;
transmitter - передатчик, радиопередатчик;
parent idea - исходная идея.

3. Прочитайте текст и переведите при помощи словаря незнакомые слова и словосочетания.

4. Прочитайте и переведите весь текст:

THOMAS ELVA EDISON

Edison was a thoughtful little boy. He was very inquisitive and always wanted to know how to do things. He was not very strong, and went to school when he was quite a big child. But his teacher thought him very stupid because he asked so many questions. So his mother, who was a teacher, took him away from school at the end of two months and taught him at home. With so kind a teacher, he made progress;
and above all, he learned to think. His mother had some good books and among them an encyclopedia. It was probably from the encyclopedia that he first took an interest in chemistry. He liked to make experiments, so he bought some books, and made a little laboratory in the cellar of his home.

When he was twelve years old, he started to earn his living and became a newsboy on the train which ran from Port Huron to Detroit. There was a corner in the baggage car where he kept his stocks of newspapers, magazines and candy. To this corner he moved his little laboratory and library of chemical books, and when he was not busy, went on with his experiments. All went well for two or three years. But when he was in his sixteenth year, one day a phosphorus bottle broke on the floor. It set fire to the baggage car, and the conductor not only put the boy off the train, but soundly boxed his ear. That was the most unfortunate part of the accident, for as a result Edison gradually lost his hearing, and became almost deaf.

Once he was standing on the platform of the station in Michigan, watching a coming train, when he saw the station agent's little boy on the track right in front of the coming engine. Another moment and the child would have been crushed; but Edison sprang to the track, seized the little one in his arms, and rolled with him to one side, just in time to escape the wheels. To show his gratitude the baby's father offered to teach telegraphy to Edison. Working at telegraphy he at the same time spent all the spare moments in the study of chemistry and electricity. Experimenting he improved telegraph apparatus. About the same time Edison made an improvement in the transmitter of the telephone which made it easier for the waves to travel, and improved the usefulness of the telephone very much. It was just about the same time that he invented the phonograph. This is the parent idea of the gramophone and dictaphone, but these inventions are only a small part of the work of this wonderful man.

5. Ответьте на вопросы:
1. How did Edison study at school? 2. What were his interests in childhood? 3. Where did he work? 4. What accident happened to Edison? 5. What happened that changed Edison's life? 6. What did Edison invent?

Text 3.

1. Прочитайте слова по транскрипции:
literate |ˈlɪt(ə)rət|, capability |keɪpəˈbɪlɪti|, curriculum |kəˈrɪkjʊləm|, metallurgy |mɪˈtalədʒi|, breadth |brɛdθ|, corpuscular |kɔːˈpʌskjʊlə|, enlightenment |ɪnˈlʌɪt(ə)nm(ə)nt|.

2. Обратите внимание на перевод следующих слов и словосочетаний:
literate - грамотный, образованный;
fellow-villager – односельчанин;
discourage - приводить в уныние, отбивать охоту;
capability - возможности, способность;
curriculum - учебный план, курс обучения;
metallurgy – металлургия;
mining - горная промышленность;
adjunct - помощник;
Russian Academy of Sciences - Российская Академия наук;
breadth - ширина, широта;
diversity - разнообразие, многообразие ;
S. Vavilov- Серге́й Ива́нович Вави́лов (советский физик, основатель научной школы физической оптики в СССР, действительный член и президент АН СССР, общественный деятель и популяризатор науки);
Law of Conservation of Mass - закон сохранения массы;
corpuscular theory - корпускулярная теория;
emphasize - подчеркивать, акцентировать, выделять;
enlightenment – просвещение.

3. Прочитайте текст и переведите при помощи словаря незнакомые слова и словосочетания.

4. Прочитайте и переведите весь текст:

M. LOMONOSOV

The Russian scientist Mikhail Vasilievich Lomonosov was born in 1711, in the village of Denisovka near the town of Kholmogory, Archangelsk Gubernia, to the family of a fisherman. Taught to read and write by a literate fellow-villager, Lomonosov had soon read all the books he could obtain in his village. At the age of 17 he left his native village, and made his way to Moscow, In Moscow he succeeded to enter the Slav-Greek-Latin Academy, the only higher educational institution in Moscow at that time.

Neither the conditions of work nor material difficulties discouraged young Lomonosov. His brilliant capabilities and hard work enabled him to complete the seven-grade curriculum of the Academy in four years. Lomonosov did not finish the last grade, as he was transferred together with eleven others of the best pupils to Petersburg to study at the University of the Academy of Sciences. Less than a year after he came to Petersburg Lomonosov was sent abroad to study metallurgy and mining.

In 1741, after his return to Russia Lomonosov was appointed Adjunct of the Academy in the class of physics and soon became a professor in chemistry and a full member of the Russian Academy of Sciences.

His tireless scientific and practical activities were striking for their breadth and diversity. “Only now, after two centuries have passed, can we grasp in full and appreciate all that was done by this giant of science”, wrote S. Vavilov. “His achievements in the spheres of physics, chemistry, astronomy, instrument-making, geology, geography, linguistics and history would be worthy of the activities of a whole academy.” No wonder Pushkin called Lomonosov “our first university.”

Among the numerous discoveries of Lomonosov is the Law of Conservation of Mass. This is the fundamental law of chemical change of substance formulated as follows: *The mass of a body remains unchanged by any physical or chemical change to which it may be subjected.*

Lomonosov developed a corpuscular theory of the structure of substance in which he anticipated the present-day theory of atoms and molecules. Lomonosov considered chemistry his “main profession”, but he was at the same time the first outstanding Russian physicist. He constantly emphasized the necessity of a close connection between chemistry and physics. He said that chemical phenomena could be treated correctly only on the basis of physical laws. Explaining chemical phenomena through the laws of physics, Lomonosov founded a new science, namely, physical chemistry.

Lomonosov was not only a talented scientist, but a materialist philosopher as well. Examining the phenomena of nature, he came to the materialistic conclusion on the fundamental question of philosophy—that of the relation of thought to being. He gave all his energy to the promotion of Russian science. In 1755 Moscow University was

founded thanks to the efforts and after the project of Lomonosov. This university became a major center of Russian enlightenment and science.

Lomonosov died in 1765, at the age of 54.

5.Ответьте на вопросы:

1. What family was M. Lomonosov born to? 2. Who taught him to read and write? 3. Where did Lomonosov study? 4. Why didn't Lomonosov finish the last grade of the Academy? 5. How did Lomonosov get to Moscow? 6. Did Lomonosov study only in Russia? 7. What scientific degrees did Lomonosov receive? 8. What theories and laws did Lomonosov discover and formulate? 9. Was Lomonosov a materialist philosopher?

TOPIC 2. GREAT DISCOVERIES

Text 1.

1. Прочитайте слова по транскрипции:

peruvians |pəˈrʊvɪənz|, cloth |klɒθ|, Sulphur |ˈsəlfər|, vulcanize |ˈvʌlkənʌɪz|.

2. Обратите внимание на перевод следующих слов и словосочетаний:

rubber - резина, каучук;
Peruvian – перуанец;
rubber tree - каучуковое дерево;
liquid – жидкость;
waxlike – восковидный;
nitric acid - азотная кислота;
sulphur – сера.

3. Прочитайте текст и переведите при помощи словаря незнакомые слова и словосочетания.

4. Прочитайте и переведите весь текст:

THE DEVELOPMENT OF RUBBER

Here is the story of rubber. From the earliest time it was common knowledge to the Peruvians that when a cut was made in the outside skin of a rubber tree, a white liquid like milk came out, and that from this a sticky mass rubber might be made. This rubber is soft and waxlike when warm, so that it is possible to give it any form. The Peruvians made the discovery that it was very good for keeping out the wet.

Then in the early part of the eighteenth century, the Americans made use of it for the first time. First they made overshoes to keep their feet dry. Then came a certain Mr. Mackintosh, who made coats of cloth covered with natural rubber. From that day to this our raincoats are still named after him.

But these first rubber overshoes and raincoats were all soft and sticky in summer, and hard and unelastic in the winter when it was cold. But the rubber we have today is not sticky, but soft and elastic, though very strong even in the warmest summer and the coldest winter. There would be no automobiles such as we have today without it. A lot of attempts to make rubber hard and strong came to nothing. First came the discovery that nitric acid made the rubber much better. Then came the idea that rubber could be made hard and strong if mixed with sulphur and put in the sun. Now it is common knowledge that the way to make rubber hard and strong - to " vulcanize" it, as we say is by heating it with Sulphur.

5.Ответьте на вопросы:
1. Who discovered rubber? 2. Do you know where rubber-trees grow? 3. What were the first things made of rubber? 4. How do we often call a raincoat? 5. What were the properties of rubber before its vulcanization? 6. How can rubber be made hard and strong?

Text 2.

1.Прочитайте слова по транскрипции:
misconceptions |ˌmɪskənˈsepʃənz|, fossilized |ˈfɒs(ə)lʌɪzd|, archeologist |ˌɑːkiˈɒlədʒɪst|, differentiation |ˌdɪfərɛnʃɪˈeɪʃn|, industrialist |ɪnˈdʌstrɪəlɪst|.

2.Обратите внимание на перевод следующих слов и словосочетаний:
Benjamin Franklin - Бе́нджамин Фра́нклин (американский изобретатель);
William Gilbert - Уи́льям Ги́льберт (английский физик);
Alessandro Volta - Алесса́ндро Во́льта (итальянский физик, химик);
Joseph Swan - Джозеф Уилсон Суон (английский химик и физик);
George Westinghouse - Джордж Вестингауз (американский промышленник);
misconception - неправильное представление, недоразумение;
abound - изобиловать, быть в большом количестве;
amber – янтарь;
copper – медь;
electrostatic generator - электростатический генератор;
negative current - отрицательный ток;
positive currents - положительный ток;
conductor - проводник;

insulator - изолятор;
investigation - исследование;
electric spark - искровой разряд; электрическая искра;
voltaic pile - вольтов столб;
positively-charged - положительно заряжённый;
negatively-charged - отрицательно заряжённый;
voltage - вольтаж, электрическое напряжение;
incandescent filament - нить лампы накаливания;
light bulb - лампа накаливания;
alternating current - переменный ток;
polyphase – многофазный:
distribution system - распределительная сеть.

3. Прочитайте текст и переведите при помощи словаря незнакомые слова и словосочетания.

4.Прочитайте и переведите весь текст:

WHO DISCOVERED ELECTRICITY?

Electricity is a form of energy and it occurs in nature, so it was not "invented." As to who discovered it, many misconceptions abound. Some give credit to Benjamin Franklin for discovering electricity, but his experiments only helped establish the connection between lightning and electricity, nothing more. The truth about the discovery of electricity is a bit more complex than a man flying his kite. It actually goes back more than two thousand years.

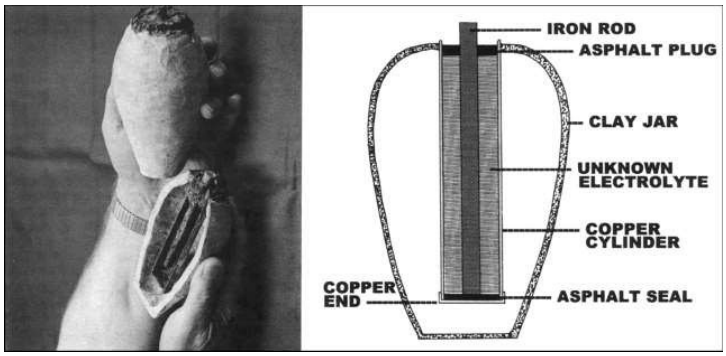

In about 600 BC, the Ancient Greeks discovered that rubbing fur on amber (fossilized tree resin) caused an attraction between the two – and so what the Greeks discovered was actually static electricity. Additionally, researchers and archeologists in the 1930's discovered pots with sheets of copper inside that they believe may have been ancient batteries meant to produce light at ancient Roman sites. Similar devices were found in archeological digs near Baghdad meaning ancient Persians may have also used an early form of batteries. But by the 17th century, many electricity-related discoveries had been made, such as the invention of an early electrostatic generator,

the differentiation between positive and negative currents, and the classification of materials as conductors or insulators.

In the year 1600, English physician William Gilbert used the Latin word “electricus” to describe the force that certain substances exert when rubbed against each other. A few years later another English scientist, Thomas Browne, wrote several books and he used the word “electricity” to describe his investigations based on Gilbert’s work. In 1752, Ben Franklin conducted his experiment with a kite, a key, and a storm. This simply proved that lightning and tiny electric sparks were the same thing.

Italian physicist Alessandro Volta discovered that particular chemical reactions could produce electricity, and in 1800 he constructed the voltaic pile (an early electric battery) that produced a steady electric current, and so he was the first person to create a steady flow of electrical charge. Volta also created the first transmission of electricity by linking positively-charged and negatively-charged connectors and driving an electrical charge, or voltage, through them. In 1831 electricity became viable for use in technology when Michael Faraday created the electric dynamo (a crude power generator), which solved the problem of generating electric current in an ongoing and practical way. Faraday’s rather crude invention used a magnet that was moved inside a coil of copper wire, creating a tiny electric current that flowed through the wire. This opened the door to American Thomas Edison and British scientist Joseph Swan who each invented the incandescent filament light bulb in their respective countries in about 1878. Previously, light bulbs had been invented by others, but the incandescent bulb was the first practical bulb that would light for hours on end. Swan and Edison later set up a joint company to produce the first practical filament lamp, and Edison used his direct-current system (DC) to provide power to illuminate the first New York electric street lamps in September 1882.

Later in the 1800’s and early 1900’s Serbian American engineer, inventor, and all around electrical wizard Nikola Tesla became an important contributor to the birth of commercial electricity. He worked with Edison and later had many revolutionary developments in electromagnetism, and had competing patents with Marconi for the invention of radio. He is well known for his work with alternating current (AC), AC motors, and the polyphase distribution system.

Later, American inventor and industrialist George Westinghouse purchased and developed Tesla’s patented motor for generating alternating current, and the work of Westinghouse, Tesla and others gradually convinced American society that the future of electricity lay with AC rather than DC.

Others who worked to bring the use of electricity to where it is today include Scottish inventor James Watt, Andre Ampere, a French mathematician, and German mathematician and physicist George Ohm.

And so, it was not just one person who discovered electricity. While the concept of electricity was known for thousands of years, when it came time to develop it commercially and scientifically, there were several great minds working on the problem at the same time.

Text 3.

1.Прочитайте слова по транскрипции:
microbiology |ˌmʌɪkrə(ʊ)bʌɪˈɒlədʒi|, microorganisms |ˌmaɪkrəʊ ˈɔːgəˌnɪzəmz|, pasteurization |ˌpɑːstʃəraɪˈzeɪʃən|, vaccination |ˌvæksɪˈneɪʃən|,cholera |ˈkɒlərə|, anthrax |ˈanθraks|, vaccine |ˈvaksiːn|.

2.Обратите внимание на перевод следующих слов и словосочетаний:
Louis Pasteur - Луи́ Пасте́р (французский микробиолог и химик);
germ theory - микробная теория;
pasteurization – пастеризация;
sterilization - стерилизация, обеззараживание;
Edward Jenner - Эдвард Дженнер (английский врач);
smallpox – оспа;
cholera – холера;
anthrax - сибирская язва;
rabies - бешенство, водобоязнь.

3. Прочитайте текст и переведите при помощи словаря незнакомые слова и словосочетания.

4.Прочитайте и переведите весь текст:

PASTEURIZATION

Louis Pasteur (1822-1895) began his scientific career as a chemist, but it is because of his applications of germ theory to the prevention of disease that he became known as 'The Father of Microbiology'. Pasteur did not create germ theory, but he proved it to be correct. Once he had achieved this, he set about finding ways to prevent germs, the microorganisms present in the air, from infecting food and people.

He completed his famous experiment proving that microorganisms were present in the air while working for a wine company. He was trying to discover why wine sometimes went bad as it was being made. Once he had found the cause - microorganisms - he began to develop the process which carries his name - pasteurization. It was perfectly possible to kill all the microorganisms in food by boiling it, a process known as sterilization, but this

damaged the taste and the quality of the food. Pasteur's process killed not all, but most, of the microorganisms, with the result that the food needed to be kept cool and eaten or drunk within a limited time. Most importantly, the quality of the food was not harmed by the process. Much of the food we eat today is pasteurized.

His next achievement was to build on the discover of the British scientist Edward Jenner. Many years earlier, Jenner had discovered a way of giving people resistance to the deadly disease smallpox, by injecting them with a similar disease that was found among cows. The process became known as vaccination. Pasteur applied germ theory to his work and looked at samples of blood taken from healthy and infected animals. He grew bacteria in his laboratory and used it to infect animals. By chance, some of these germs failed to grow well in his laboratory; these weak germs were then used to infect some chickens. Although the chickens suffered at first, they made a complete recovery and could not be infected again. In this way, he discovered a way of increasing resistance to disease. Pasteur developed vaccines for many serious diseases including cholera and anthrax. At that time, these illnesses were certain death for anyone who caught them.

Pasteur's discoveries revolutionised work on infectious diseases. Pasteur's vaccines were different from Jenner's in one important way. Jenner found a weak form of smallpox and transferred it to humans. Pasteur weakened the disease in a laboratory and immunised people with that weakened form. His success allowed a colleague to develop the first vaccine for rabies, which Pasteur used to save the life of a nine-year-old boy. By this act, Pasteur's position as a hero was assured.

Thanks to the work of Pasteur, we now live longer, our food stays fresh longer and we are less likely to die of disease. Indeed, smallpox is no longer found anywhere in the world, due to a huge vaccination programme carried out in the 20th century. This could never have happened without the scientific achievements of The Father of Microbiology.

5.Ответьте на вопросы:

1 Pasteur used his work on pasteurisation to:

A move his specialisation to microbiology.

B find ways to protect food and people from infection.

C make a theory of germs.

D prevent microorganisms being in the air.

2 Pasteurisation

A kills only dangerous microorganisms.

B works for a limited time.

C doesn't work with wine.

D kills all the microorganisms.

3 Pasteur's vaccinated animals
A recovered from the disease.
B died from the disease.
C didn't suffer from the disease.
D didn't catch the disease.
4 Pasteur became a hero when
A he invented pasteurisation.
B a vaccine saved a boy's life.
C he discovered vaccines.
D a colleague developed a rabies vaccine.
5 Because of Pasteur,
A we eat less tasty food.
B there are no germs anymore.
C many serious diseases are rare.
D we don't need to keep food cool.

Text 4.

1.Прочитайте слова по транскрипции:
phenomena |fəˈnɒmɪnə|, aeroplane |ˈɛːrəpleɪn|, equation |ɪˈkweɪʒ(ə)n|.

2.Обратите внимание на перевод следующих слов и словосочетаний:
Galileo - Галиле́о Галиле́й (итальянский физик, механик, астроном, философ);
Einstein - Альбе́рт Эйнште́йн (физик-теоретик);
Law of Universal Gravitation - закон всемирного тяготения;
Special Theory of Relativity - специальная теория относительности;
General Theory of Relativity - общая теория относительности;
matter - материя, масса;
claim – утверждение;
relative - относительный, сравнительный;
multi-dimensional – многомерный;
obstacles – препятствия;
furthermore - более того, кроме того;
geometrical calculations - геометрический расчёт;
solar eclipse - солнечное затмение;
equation – уравнение.

3. Прочитайте текст и переведите при помощи словаря незнакомые слова и словосочетания.

4.Прочитайте и переведите весь текст:

THE GENERAL THEORY OF RELATIVITY

Isaac Newton's discovery of the Law of Universal Gravitation would seem to have definitively answered the question of planetary movement. And yet, it became apparent to scientists that a number of phenomena which they observed did not agree with those they expected to see based on Newton's predictions.

One of the differences was the orbit of the planet Mercury, which did not quite match the orbit predicted by Newton's theory. Another problem resulted from James Clerk Maxwell's theory of electromagnetism (about 1870), which indicated that space was filled with matter that moved and was not empty and motionless, as Newton had
believed. Finally, there was a problem with Newton's claim that light travelled at a constant speed, whether the observer was moving toward or away from it or not.

These questions captured the interest of a brilliant young physics student, Albert Einstein. Einstein's first attempt to solve the problem was his 1905 paper on The Special Theory of Relativity, a concept which had been noted by Galileo in 1632. In this work. Einstein found that time and space are relative, not constant. This means that time and space are different depending on where the observer is. This was proved by an experiment involving two clocks: one was put on an aeroplane which travelled
around the world and the other remained at the starting point on the ground. When the first one returned, it was running slower than the one which had been left behind, exactly as Einstein had predicted.

Einstein continued to expand on this theory, and in 1916 presented a paper on a new theory, The General Theory of Relativity, which took into account the effect of gravitation on space and time. It involved the notion of space time, a multi-dimensional phenomenon which is constantly moving and bending as it meets obstacles in its path. Everything in the universe is part of this space time and is carried along with it. Furthermore, gravity is not a force which moves things, but rather it is an element which illustrates curved space and time.

Einstein's theory was based on geometrical calculations and principles and had to be proved by scientific testing in the natural world, which many scientists were eager to do. In 1919, during a solar eclipse, a British team working in two different locations measured the light of several stars. They found that the light from these stars was actually bent, just as Einstein's theory had predicted. Needless to say, Einstein immediately became

internationally famous. Scientists continued to apply Einstein's equations to other natural phenomena, all with positive results.

4. Решите, являются ли эти утверждения верными (true or false?):
1) The orbit of the planet Mercury led scientists to question Newton's Law of Universal Gravitation.
2) Maxwell agreed with Newton that space was empty and motionless.
3) Einstein was the first scientist to talk about the notion of relativity.
4) According to Einstein, gravity is not a force which moves matter.
5) Einstein's theories were never proved by scientific testing.

TOPIC 3. MATHEMATICS

Text 1

1. Обратите внимание на перевод следующих слов и словосочетаний:
addition - сложение;
sum - сумма;
total of - всего;
increased by - увеличенный на;
subtraction - вычитание;
difference of - разность;
decreased by - уменьшенный на;
less than - отнять;
multiplication - умножение;
product - произведение ;
division - деление;
quotient - результат деления;
fraction of a number - дробь числа;
exponentiation - возведение в степень;
fourth power of - четвёртая степень;
square of – вторая степень (квадрат);
cube of - третья степень (куб);
radical expression - подкоренное выражение;
square root of - квадратный корень;
additive inverse - противоположный элемент, обратная величина;
opposite of - противоположного знака (обратного);

MATHEMATICAL EXPRESSIONS

In algebra, letters are used to express the general properties of numbers. Representing one number by the letter *a* and another by the letter *b* we can write the equality *a x b = b x a* or, more shortly, *ab=ba*. If no other sign is indicated, the multiplication sign is understood between any two letters written side by side.

To represent numbers letters of the Latin alphabet are generally used.

	Examples:	Mathematical phrases (for examples)
addition	$2 + x$	The **sum** of two and a number or The **total** of two and a number or Two **increased** by a number
subtraction	$12 - 5$	The **difference** of twelve and five or Twelve **decreased** by five or Twelve **less** five or Five **less** than twelve
multiplication	$3 \cdot 7$ *$2x$	The **product** of three and seven or Three **times** seven *__Twice__ a number
division	$x \div 15$	The **quotient** of a number and fifteen
fraction of a number	$\frac{1}{4}x$	One-fourth of a number
Additive inverse	$-x$	**Opposite** of a number
exponentiation	10^4 *3^2 *x^3	The **fourth power** of ten *The **square** of three *The **cube** of a number
radical expression	$\sqrt{4}$	The **square root** of four

multiplicative inverse	$\frac{1}{x}$	**The multiplicative inverse** of a number or **The reciprocal** of a number

2.Назовите арифметические знаки:

+ ; : ; —; x ; =

3.Прочтите числительные:

5, 15, 51, 150, 523, 3, 13-й, 1-й

4. Переведите на английский язык:

Сложение, сложить, слагаемые, сумма; вычитание, вычесть, разность; умножение, умножить, множитель, произведение; деление,делить, частное

5. Прочтите цифровые выражения:

28 : 4 = 7 8 1 :9 = 9

7 x 7 = 49 9 + 9 = 1 8

6 x 9 =54 18 - 7 = 1 1

Text 2.

1.Обратите внимание на перевод следующих слов и словосочетаний:

belonging - собственность;

taxation - сумма налога;

tally - единица счёта;

Incas - империя инков (крупнейшее по площади и численности населения индейское раннеклассовое государство в Южной Америке в XI—XVI веках).

2.Прочитайте текст и переведите при помощи словаря незнакомые слова и словосочетания.

3.Прочитайте и переведите весь текст:

MATHEMATICS

The English word mathematics tells us something about the influence the Ancient Greeks had on our knowledge. The word comes from the Greek for science, learning and knowledge. It is usually shortened to maths in British English and to math in the USA.

Mathematics developed from a series of ideas, each new idea building on earlier ones. Each new idea became more complex as mathematicians tried to explain how things in the world relate to one another. The first idea to have developed was certainly that of number. People needed to count their belongings. As society developed, numbers became more and more important for business dealings and taxation and it became especially important to be able to record numbers. A wide variety of systems for recording numbers developed in different parts of the world. One example is the tallies that were used by the Incas in South America. They used pieces of string of different lengths and by tying knots in different places along the string, they were able to keep tax records and business accounts throughout their land.

With writing, different ways of recording numbers developed in different countries, too. Roman numerals are a well-known example. In this system I is one and X is ten, so IX is one before ten, that is nine, and XI is eleven. It was not until the 16th century that the system of mathematical notation that we use today finally developed. It is a system that uses Arabic numerals (1, 2, 3 and so on) with a set of symbols + (plus), - (minus), = (equals) for example, along with letters, many of which are taken from the Greek alphabet. It is a system which is used by all mathematicians all over the world. In fact, it has been said that mathematics is one of only two genuinely international languages; the other one is music.

Whether or not mathematics is a science is still a matter of opinion in the mathematical community. Some say no, it is not because it does not pass the test of being a pure science. We know that one plus one is two because that is how we count. No one can set up an experiment to prove that one plus one is two without counting. Therefore, because it cannot be proved by experiment, mathematics is not a science. Others say yes, it is, because science is the search for knowledge and that is what mathematics does.

Therefore, mathematics is a science. Whatever your point of view, there is no doubt that mathematics is applied to all sciences. Many of the most important developments in fields such as physics or engineering have led to further developments in mathematics. The argument over whether mathematics is a science or not appears to be unimportant when you realise that it is impossible to separate mathematics from science or science from mathematics. Many universities recognise this. In many places of learning there are divisions of study, often called Mathematics and Science. The unbreakable connection between mathematics and all other sciences is recognized by the very way in which we study them.

4. Решите, являются ли данные утверждения верными (true or false?):

1) Mathematics developed in complexity due to a need to understand the relationships between things.
2) The Incas were the first to come up with a number system.
3) Mathematics is an international language because it uses Arabic numerals.
4) Opinions are divided over whether mathematics is truly scientific.
5) The development of mathematics is dependent on other sciences.

Text 3

1. Прочитайте слова по транскрипции:
algebra |ˈaldʒɪbrə|, Babylonian |ˌbabɪˈləʊnɪən|, algebraical |ˌældʒɪˈbreɪkəl|, equation |ɪˈkweɪʒ(ə)n|

2.Обратите внимание на перевод следующих слов и словосочетаний:
Babylonian - вавилонянин (древнее население Южной Месопотамии);
arithmetical laws - арифметический закон;
denote - обозначать;

3.Прочитайте текст и переведите при помощи словаря незнакомые слова и словосочетания.

4.Прочитайте и переведите весь текст:

ALGEBRA

Algebra originated in the Middle East. Earlier than 1000 BG, the Babylonians developed an arithmetical system for solving problems that could be written algebraically. This was in advance of other systems, notably that of the Ancient Egyptians, who were able to solve the same problems, but did so by using geometry. The word algebra comes from Arabic and translates into English as reunion. It describes a system of mathematics which performs calculations by firstly rewriting, that is, transposing them, and then reducing them to their simplest form.

Algebra is the branch of mathematics which studies the structure of things, the relationship between things and quantity. It looks different from arithmetic when it is written. Arithmetic uses numbers and the four operators (plus, minus, multiply and divide). Algebra uses symbols, usually letters, and the operators. Actually, it is not very different from arithmetic: what can be done in algebra can be done in arithmetic. There are good mathematical reasons, however, why algebra is used instead of arithmetic.

Firstly, by not using numbers, mathematicians are able to set out arithmetical laws. In this way they are able to understand the system of numbers more clearly. Secondly, by using algebra, mathematicians are able to perform calculations where unknown quantities are involved. This unknown is usually represented by x. Solutions can then be applied not just to the immediate problem, but to all problems of the same nature by the use of a formula. A common algebraic problem to solve in school exams would be, for example: find x where $3x + 8 = 14$. A third reason for the use of algebra rather than arithmetic is that it allows calculations which involve change in the relationship between what goes into the problem and what comes out of it, that is, between input and output. It is an algebraic formula which allows a business to calculate its potential profit (or loss) over any period of time.

It is possible to classify algebra by dividing it into four areas. Firstly, there is elementary algebra in which symbols (such as x and y, or a and b) are used to denote numbers. In this area, the rules that control the mathematical expressions and equations using these symbols are studied. Then, there is abstract or modern algebra in which mathematical systems consisting of a set of elements and several rules (axioms) for the interaction of the elements and the operations are defined and researched. Thirdly, there is linear algebra (linear equations) in which linear transformations and vector spaces, including matrices, are studied. Finally, there is universal algebra in which the ideas common to all algebraic structures are studied.

Like all branches of mathematics, algebra has developed because we need it to solve our problems. By avoiding the use of numbers we are able to generalise both the problem and the solution.

5. Решите, являются ли данные утверждения верными (true or false?):

1) Algebra is a mathematical system which rewrites a problem making it as simple as possible.
2) Written down, algebra differs to arithmetic in the operators it uses.
3) Algebra has some advantages to offer the mathematician.
4) Algebraic formulae are primarily of use in businesses.
5) Universal algebra combines all the structures from the other three areas.

TOPIC 4. DRAWINGS

Text1

1.Обратите внимание на перевод следующих слов и словосочетаний:
drawing - чертеж;
computer-aided design - компьютерный дизайн;
scale - масштаб;
scale drawing - чертёж, выполненный в масштабе;
general arrangement drawing - чертеж общего вида;
detail drawing - детальный чертёж;
electrical circuit - электрическая цепь;

2.Прочитайте текст и переведите при помощи словаря незнакомые слова и словосочетания.

3.Прочитайте и переведите весь текст:

DRAWING TYPES AND SCALES

In engineering, most design information is shown on drawings. Today, drawings are generally not drawn by hand. They are produced on computer, using CAD (computer-aided design) systems.

A key factor on a drawing is the scale - that is, the size of items on the drawing in relation to their real size. When all the items on a drawing are shown relative to their real size, the drawing is drawn to scale, and can be called a scale drawing. An example of a scale is 1:10 (one to ten). At 1:10, an object with a length of 100 mm in real life would measure 10 mm on the drawing.

Most engineering designs consist of a set of drawings (a number of related drawings):

• General arrangement (GA) drawings show whole devices or structures, using a small scale. This means objects on the drawing are small, relative to their real size (for example, a 1:100 drawing of an entire building).

• Detail drawings show parts in detail, using a large scale, such as 1:5 or 1:2. Small parts are sometimes shown in a detail as actual size (1:1), or can be enlarged to bigger than actual size (for example, 2:1).

For electrical circuits, and pipe and duct networks, it is helpful to show designs in a simplified form. In this case, schematic drawings (often referred to as schematics) are used. An everyday example is the map of a train network.

Notes: When written, drawing is often abbreviated to dwg.

CAD is pronounced as a word: /kred/.

4. Дополните следующие предложения:
1) Enlarged drawings show components larger than their .....
2) For engineering drawings, 1:5 is a commonly used ..... .
3) Whole machines or structures are shown on ..... drawings.
4) Electrical drawings don't usually show sizes. They're shown as ..... .
5) A ..... of drawings for a large project can consist of hundreds of pages.
6) Most drawings are produced on computers, using ..... software.

Text 2

1.Обратите внимание на перевод следующих слов и словосочетаний:
technical requirements - технические требования; техническое задание;
worst - case scenario - наихудший случай;
maximum loads - предельная нагрузка;

2.Прочитайте текст и переведите при помощи словаря незнакомые слова и словосочетания.

3.Прочитайте и переведите весь текст:

DESIGN CALCULATIONS

Design information is shown on drawings, and written in specifications - documents which describe the materials, sizes and technical requirements of components. In order to specify this detailed information, an engineer must evaluate- that is, identify and calculate- the loads (forces) that key components will have to carry. To do this, the engineer needs to determine (identify) the different loads, then quantify them- that is, calculate them in number form. Usually, each load is quantified based on a worst-case scenario - in other words, the engineer will allow for the maximum load, such as an aircraft making a very hard landing, or a bridge being hit by extremely high winds.

After maximum loads have been quantified, an engineer will apply a factor of safety. This is an extra margin to make the component strong enough to carry loads that are higher than the worst-case scenario. For example, a factor of 1.5 increases the load a component can carry by 50%. After this has been factored in, the engineer will then sizes the components that is, calculate their required size.

Engineers are sometimes criticized because they overdesign things (add excessive factors of safety), which increases costs. However, according to Murphy's Law, “Anything

that can go wrong, will." This suggests that belt and braces- an expression often used in engineering, based on the safest method of holding up trousers - is a sensible approach.

4. Выберите правильное слово в скобках:

1 The types of loads that will be encountered must be (designed / determined).
2 Maximum loads are based on predicted (specifications / worst-case scenarios).
3 On top of maximum loads, additional safety margins are (factored in / sized).
4 For cost reasons, components shouldn't be (overdesigned / quantified) .
5 The practice of overdesigning components can be described as the (belt and braces / factor of safety) approach.
6 (Quantifying / Sizing) components means calculating their dimensions.

Text 3

1.Обратите внимание на перевод следующих слов и словосочетаний:
draw - чертить;
drawing - чертёж, рисунок;
industry - индустрия;
mining - горное дело;
ship-building - кораблестроение, судостроение;
descriptive geometry - начертательная геометрия;
mechanical drawing - машиностроительное черчение.

2.Прочитайте текст и переведите при помощи словаря незнакомые слова и словосочетания.

3.Прочитайте и переведите весь текст:

FROM THE HISTORY OF THE RUSSIAN DRAWING

People learned to draw pictures of the objects around them long before they learned to write. The ability to make simple drawings helped man to develop his first written language. He used picture instead of letters, and in this way told about military campaigns, battles and hunting.

The ancient people drew on the bark of trees, on stone, bone, leather and other materials. In time they learned to make a material called papyrus, which they used specially for writing and for drawing.

People began to use pictures for building houses, palaces and other buildings. As time went on the pictures used for technical purposes changed, took other forms, and gradually turned into drawings.

At first, these drawings consisted only of a single picture showing the object viewed from above. This picture was called a plan. Later, people began to add a front view of the object to this plan. And then other "views' were added. The methods of picturing objects were improved.

In Russia the people developed their own methods of representation of objects in drawing. Historical documents and the monuments of ancient architecture in Kiev, Vladimir and other cities show that the architects of Ancient Rus (Древняя Русь) used drawings. The method that Andrei Rublev, the famous Russian painter of the 14th—15th centuries, used to depict buildings in his pictures is very similar to one of the methods used in drawing today.

A plan of the city of Moscow was drawn in 1597. Many documents bear witness to the great skill of the Russian graphic artists of those days. Among these documents are A Map of Siberia, A Book of Drawings of the Towns and Lands of Siberia and others.

Industry, mining and ship-building began to develop in Russia at the beginning of the 18th century. This was also a period of progress in the use and improvement of drawings.

Russian inventors also did much to develop methods of making mechanical drawings. Ivan Kulibin, the famous Russian inventor (1735—1818), made drawings of his numerous inventions.

The drawings of Russia's first steam-powered machines, invented by the outstanding Russian mechanic Ivan Polsunov, are likewise modern drawings.

Very complex drawings were made by Efim and Miron Cherepanov (father and son), the famous Russian mechanics and engineers who invented the first Russian steam engine.

It is interesting to note that Ivan Kulibin, Ivan Polsunov and many others made their drawings by methods which were first described by Gaspard Monge, the French engineer and scientist, only in 1795.

Kosma Frolov, a Russian inventor, made interesting drawings of his hydropower installations, It was in 1787. Vasily Bazhenov, the noted Russian architect (1737—1799), was a very skilful draughtsman. His pupil and assistant, Matvei Kasakov (1738—1812), who built many beautiful buildings that stand in Moscow to this day, was also very skilled in graphic art. Pyotr Titov, the talented self-taught Russian ship-builder (1843—1894) made superb drawings of ships.

Modern mechanical drawing is based on scientific principles known as descriptive geometry. The founder of this science in Russia was Professor J. A. Sevastyanov, who

solved many problems of descriptive geometry and showed how to apply it to mechanical drawing.

The famous Russian scientist V. I. Kurdyumov (1853—1904) contributed much to Russian science. In his numerous works he gave a new scientific trend to many fields of descriptive geometry and developed methods for applying this science to technical drawing.

So the Russian school of engineering graphics was perfected by many Russian architects, mechanics, engineers, technicians and scientists.

3. Найдите в тексте ответы на следующие вопросы:
1. How did people tell about their life long ago? 2. What did people use pictures for? 3. What is the difference between a plan and a drawing? 4. Did the architects of Ancient Rus use drawings? 5. What did Andrei Rublev depict in his pictures? 6. How can you prove that graphic art was developed in old Russia? 7. Which inventors made drawings of their inventions? 8. Who was the first to describe methods of drawing? 9. What is mechanical drawing based on?

TOPIC 5. ELECTRICITY

Text 1

1.Прочитайте слова по транскрипции:
voltage |ˈvəʊltɪdʒ|, alternating |ˈɔːltɜːneɪtɪŋ|, data |ˈdeɪtə|, transmitting |trænzˈmɪtɪŋ|.

2.Обратите внимание на перевод следующих слов и словосочетаний:
electric power - электрическая мощность; электрическая энергия;
transmitting - передающий;
distributing - распределительный;
high voltages - источники высокого напряжения;
direct current - постоянный ток;
alternating current - переменный ток;
power generation - выработка энергии;
transmission - передача;
AC motors - двигатели переменного тока;
DC motors - двигатели постоянного тока.

3.Прочитайте текст и переведите при помощи словаря незнакомые слова и словосочетания.

4.Прочитайте и переведите весь текст:

ELECTRICITY

The field of electric power is concerned with the design and operation of systems for generating transmitting and distributing electric power. Engineers in this field have brought about several important developments since the late 1970. One of these is the ability to transmit power at extremely high voltages in both the direct current and alternating current modes, reducing power losses proportionately. Another is the realtime control of power generation, transmission, and distribution using computers to analyse the data fed back from the power system to a central station and thereby optimizing the efficiency of the system while it is in operation

A significant advance in the engineering of electric machinery has been the introduction of electronic controls that enable AC motors to run at variable speeds be adjusting the frequency of the current fed into them. DC motors have also been made to run more efficiently this way.

Text 2

1.Прочитайте слова по транскрипции:
alternator |ˈɔːltəneɪtə|, alternate |ɔːlˈtɜːnət|, dynamo |ˈdʌɪnəməʊ|.

2.Обратите внимание на перевод следующих слов и словосочетаний:
convert – превращать;
generator - генератор;
alternator - генератор переменного тока
dynamo - динамо-машина;
magnetic field - магнитное поле.

3.Прочитайте текст и переведите при помощи словаря незнакомые слова и словосочетания.

4.Прочитайте и переведите весь текст:

ELECTRIC MOTORS

As is known, a machine that converts mechanical energy into electrical energy is called a generator, alternator, or dynamo, and a machine that converts electrical energy into mechanical energy is called a motor. Two related physical principles underlie the operation of generators and motors. The first is the principle of electromagnetic

induction discovered by the British scientist Michael Faraday in 1831. If a conductor is moved through a magnetic field, or if the strength of the magnetic field acting on a stationary conducting loop is made to vary, a current is set up or induced in the conductor. The converse of this principle is that of electromagnetic reaction, first observed by the French physicist Andre Marie Ampere in 1820. If a current is passed through a conductor located in a magnetic field, the field exerts a mechanical force on it.

A motor's purpose is to turn electrical energy into mechanical energy. It takes electricity and turns it into energy that can be used by us.

An electric motor uses magnetism and electric currents to work. There are two different kinds of motors, Alternate Current (AC) and Direct Current (DC) Motors. These kinds of motors use the same parts as a basic electric motor, only using two different kinds of current.

Motors began with electromagnets. In 1831, Michael Faraday succeeded in building the first electric motor. Joseph Henry was working with motors at that time. Henry and Faraday are both credited with building the first experimental electric motors. ...In 1887, Nikola Tesla introduced the Alternate Current (AC) motor. All other motors up to that time had been using direct current. Now, alternate current motors are easier to use than direct current ones.

Today, motors are used everywhere. They are used in cars and many household appliances. Even though many people don't recognize what all it does, the electric motor has become a very useful invention.

Text 3

1.Прочитайте и переведите весь текст:

ELECTRIC BATTERY

In science and technology, a battery is a device that stores energy and makes it available in an electrical form. A battery converts chemical energy into electric energy. It is a connected bunch (or "battery") of electro-chemical devices. How it works? The Voltaic pile was the first modern electric battery, invented by Alessandro Volta in 1800. Volta demonstrated that when metals and chemicals come into contact with each other they produced an electrical current. In his research, Volta placed together several pairs of alternating copper (or silver) and zinc discs separated by cloth and soaked the cloth in brine (salt water) to increase conductivity, and an electrical current was produced.

Text 4

1.Обратите внимание на перевод следующих слов и словосочетаний:
substances - вещества;
friction - трение;
electron theory - электронная теория;
whereas - при этом;
semi-conductor - полупроводник;
continuous current - непрерывный ток;
galvanoscope - гальваноскоп;
one way switch - однопозиционный выключатель;
two way switch - переключатель на два положения.

2.Прочитайте текст и переведите при помощи словаря незнакомые слова и словосочетания.

3.Прочитайте и переведите весь текст:

THE CONCEPT OF ELECRICAL CURRENT

In the beginning of the 17th century Sir William Gilbert discovered that many substances could be electrified by friction. Gilbert named this effect “electric” after the word “electron” — the Greek name for amber. In 1756 the great Russian scientist M. V. Lomonosov was the first to make theoretical analysis of electrical phenomena.

At present the nature of electrification is explained by the electron theory. According to the modern theory all matter is composed of atoms or tiny particles. There are many kinds of atoms. Each atom consists of a nucleus, a small positively charged mass and a number of lighter negatively charged particles called electrons, which revolve around the nucleus. Normally each atom of a substance is electrically neutral, or it has equal amounts of negative and positive charges, i.e. produces no electrical effects. If the number of negative charges is not equal to the number of positive charges, the matter will produce electrical effects.

When an electric charge is at rest it is spoken of as static electricity, but when it is in motion it is referred to as an electric current. In most cases, an electric current is described as a flow of electric charges along a conductor.

Not all substances are good conductors of electricity, as a general rule metals are good conductors of electricity, whereas nonmetals are poor conductors. The poorest of conductors are commonly called insulators or nonconductors. There are a large number

of substances that are neither good conductors of electricity nor good insulators. These substances are called semi-conductors.

An electric current which flows in the same direction through a conductor or a current which does not change its polarity is called a direct current or a continuous current. Its abbreviation is D. C. An alternating current (A. C.) flows first in one direction and then in the other.

An electric circuit is a path through which an electric current flows. This is a complete path along which electrons can transmit their charges. An electric circuit includes a battery, generator, or magnetic means for producing current flow. Some portion of the circuit is made to do useful work.

The circuit is said to be open when no charges can move due to a break in the path. The circuit is said to be closed when no break exists —when switches are closed and all connections are properly made. Special symbols are used to show electrical systems. There is a wide range of these symbols. There are some of them which are used when we draw circuits:

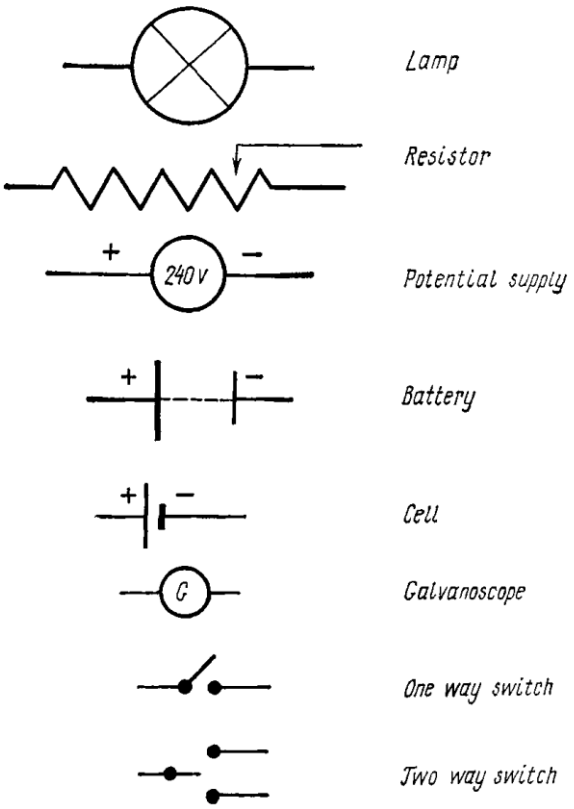

Fig.1. Circuit symbols

Text 5

1.Прочитайте слова по транскрипции:
ammeter |ˈamɪtə|, amperes |ˈæmpeəz|, voltmeter |ˈvəʊltmiːtə|, voltage |ˈvəʊltɪdʒ|, aluminium |al(j)ʊˈmɪnɪəm|, glass |glɑːs|, ohmmeter |ˈəʊmˌmiːtə|, wattmeter |ˈwɒtmiːtə|.

2.Обратите внимание на перевод следующих слов и словосочетаний:
electrical values- электрическая величина;
ammeter - амперметр;
amp - ампер;
volt - вольт;
ohm - ом;
resistance - сопротивление;
ohmmeter - омметр;
galvanometer – гальванометр;
circuit - цепь (в электрике);
shunt - шунт; соединение;
armature coil - якорная катушка.

3.Прочитайте текст и переведите при помощи словаря незнакомые слова и словосочетания.

4.Прочитайте и переведите весь текст:

ELECRICAL MEASURING UNITS AND INSTRUMENTS

Any instrument which measures electrical values is called a meter. An ammeter measures the current in amperes. The unit is named after Andre Marie Ampere, a French scientist, who discovered a great number of facts about electricity over a hundred years ago. The abbreviation for the ampere is amp. A voltmeter measures the voltage and the potential difference in volts. The volt is named after Alessandro Volta, an Italian scientist.

The current in a conductor is determined by two things, the voltage across the conductor and the resistance of the conductor. Every material object offers some resistance to the flow of an electron current through it. Good conductors like the metals, copper, silver and aluminium offer very little resistance, while nonconductors such as glass, wood and paper offer a very high resistance. The unit by which resistance is measured is called the ohm. The resistance in practice is measured with the ohmmeter. A wattmeter measures electrical power in watts. Very delicate ammeters are often used for

measuring very small currents. A meter whose scale is calibrated to read a thousandth of an ampere is called a milliammeter. One whose scale is calibrated in millionth of an ampere is called a microammeter or galvanometer.

Whenever an ammeter or voltmeter is connected to a circuit to measure electric current or potential difference the ammeter must be connected in series and the voltmeter in parallel.

As illustrated in Fig.1 (circuit diagram showing the connections for an ammeter and voltemeter) the ammeter is so connected that all of the electron current passes through it. To prevent a change in the electron current when such an insertion is made, all ammeters must have a low resistance. Most ammeters therefore have a low resistance wire, called a shunt, connected across the armature coil. A voltmeter, on the other hand, is connected a cross that part of the circuit for which a measurement of the potential difference is required. If the potential difference between the ends of the resistance R is wanted, the voltmeter is connected as shown.

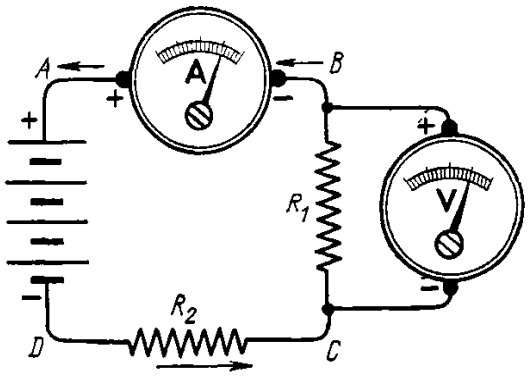

TOPIC 6. MATERIAL TYPES

Text 1

1.Прочитайте слова по транскрипции:
iron |ˈaɪən|, hydrogen |ˈhʌɪdrədʒ(ə)n|, alloy |ˈælɔɪ|, chromium |ˈkrəʊmɪəm|, manganese |ˈmaŋgəniːz|, tungsten |ˈtʌŋst(ə)n|.

2.Обратите внимание на перевод следующих слов и словосочетаний:
iron - чёрный металл;
copper - медь;
carbon - углерод;
silicon - кремний;
ferrous metals - чёрные металлы;
non-ferrous metals - цветные металлы;
aluminium - алюминий;
chemically bound - химически связанный;
hydrogen - водород;
oxygen - кислород;

alloy - сплав;
steel - сталь;
iron-carbon alloy - железо-углеродистый сплав;
chromium - хром;
manganese - марганец;
tungsten - вольфрам.

3.Прочитайте текст и переведите при помощи словаря незнакомые слова и словосочетания.

4.Прочитайте и переведите весь текст:

MATERIAL TYPES

Engineering materials can be divided into:

• metals- examples of metallic materials are iron (Fe) and copper (Cu)
• non-metals- examples of non-metallic materials are carbon (C) and silicon (Si).

As iron is such a widely used material, metals can be divided into:

• ferrous metals- those that contain iron;
• non-ferrous metals- those that do not contain iron.

With regard to the chemical composition of materials -the chemicals they contain, and how those chemicals are combined- three main categories can be used:

• Elements are pure materials in their most basic form. They cannot be broken down into different constituents ('ingredients'). Examples of elements widely used in engineering materials are iron, carbon and aluminium (AI).
• Compounds consist of two or more elements that are chemically bound - that is, combined by a chemical reaction. An everyday example is water, which is a compound of hydrogen (H) and oxygen (0).
• Mixtures consist of two or more elements or compounds which are mixed together, but which are not chemically bound. In engineering, common examples are alloys -that is, metals which have other metals and/or non-metals mixed with them.

A common example is steel, which is an iron-carbon alloy, and can include other alloying metals- metals which are added to alloys, in small quantities relative to the main metal. Examples of widely used alloying metals are chromium (Cr), manganese (Mn) and tungsten (W).

5.Скажите, являются ли данные утверждения верными или неверными (true or false):

1 The elements that make up a compound are chemically bound.

2 Alloys are chemical compounds that are frequently used in engineering.
3 Alloys can contain both metallic and non-metallic constituents.
4 In an alloy, an alloying metal is the biggest constituent, by percentage.
5 Steel is a metallic element.

Text 2

1.Прочитайте слова по транскрипции:
significant |sɪgˈnɪfɪk(ə)nt|, quantity |ˈkwɒntɪti|, approximately |əˈprɒksɪmətli|, molybdenum |məˈlɪbdənəm|, cobalt |ˈkəʊbɔːlt|, deteriorate |dɪˈtɪərɪəreɪt|, oxidizing |ˈɒksɪdaɪzɪŋ|.

2.Обратите внимание на перевод следующих слов и словосочетаний:
steel - сталь;
alloy - сплав;
carbon steel - углеродистая сталь;
mild steel - мягкая сталь; малоуглеродистая сталь;
medium carbon steel - среднеуглеродистая сталь;
alloy steel - легированная сталь;
chromium - хром;
nickel - никель;
manganese - марганец;
molybdenum – молибден;
vanadium - ванадий;
stainless steel - нержавеющая сталь;
tool steel - инструментальная сталь;
corrode - ржаветь; подвергаться действию коррозии;
iron oxide - окись железа;

3.Прочитайте текст и переведите при помощи словаря незнакомые слова и словосочетания.

4.Прочитайте и переведите весь текст:

STEEL

Steel is the most widely used engineering material. Technically, though, this well-known alloy of iron and carbon is not as simple as one might think. Steel comes in a

huge range of different grades, each with different characteristics. For the inexperienced, it can be difficult to know where to begin.

A good place to start is with the two main types of steel. The first, carbon steels, consist of iron and carbon, and contain no significant quantities of other metals. Carbon steels can be divided into three main grades:

• Mild steel - the most widely used grade - is a low carbon steel which contains up to approximately 0.3% carbon.

• Medium carbon steel contains between approximately 0.3% and 0.6% carbon.

• High carbon steel contains between approximately 0.6% and 1.4% carbon.

The second main category of steel is alloy steels, which consist of iron, carbon and one or more alloying metals. Specific grades of alloy steel include:

• low alloy steels, which contain 90% or more iron, and up to approximately 10% of alloying metals such as chromium, nickel, manganese, molybdenum and vanadium • high strength low alloy steels (HSLA), which contain smaller quantities of the above metals (typically less than 2%)

• stainless steels, which contain chromium as well as other metals - such as nickel - and which do not rust.

• tool steels, which are extremely hard, and are used in cutting tools. They contain tungsten and/or cobalt. A widely used grade of tool steel is high-speed steel, which is used in cutting tools that operate at high temperatures, such as drill bits.

One weakness of mild steel is that it corrodes - its surface progressively deteriorates due to a chemical reaction. This reaction takes place between the iron in the steel and the oxygen (02) in the air, to form iron oxide. When iron corrodes, we say that it rusts. In some metals, such as aluminum (Al), the presence of corrosion is not a problem, as the layer of oxide around the metal remains hard, which prevents it from oxidizing any further. However, when mild steel goes rusty, the rust on the surface comes off continuously, and a new rusty layer forms, progressively 'eating into' the metal.

5. Скажите, являются ли данные утверждения верными или неверными (true or false):

1 Steel is an alloy of iron and carbon.

2 Mild steel is a high carbon steel.

3 Alloy steels contain carbon.

4 Chromium and nickel are used as alloying metals in steel.

5 Low alloy steels contain more chromium than iron.

6 Stainless steel is an alloy steel.

7 Tungsten is added to steel to make it softer.

8 High-speed steel is suitable for making cutting tools that get very hot.

Text 3

1.Прочитайте слова по транскрипции:
duralumin |djʊˈraljʊmɪn|, titanium |tʌɪˈteɪnɪəm|, brass |brɑːs| , precious |ˈprɛʃəs|, galvanized |ˈgælvənaɪzd|, zinc |zɪŋk|.

2.Обратите внимание на перевод следующих слов и словосочетаний:
aircraft manufacturing - самолётостроение;
lightweight metal - лёгкий металл;
pipe - труба;
brass - жёлтая медь; латунь;
duralumin – дюралюминий;
tin - олово, жесть;
lead - свинец;
silver - серебро;
gold – золото;
corrosion-resistant - коррозиеустойчивый, устойчивый к воздействию коррозии;
plating - покрытие металлом (электролитическим путём);
galvanizing - гальваническое покрытие металлом; оцинковка;
molten - расплавленный; жидкий;
acid - кислота;
electrolyte - электролит;
negative terminal - отрицательная клемма, полюс аккумуляторной батареи;
positive terminal - полюс аккумуляторной батареи; положительная клемма.

3.Прочитайте текст и переведите при помощи словаря незнакомые слова и словосочетания.

4.Прочитайте и переведите весь текст:

NON-FERROUS METALS

Aluminium is widely used, often in alloy forms. An example is duralumin, an alloy used in aircraft manufacturing, which also contains copper (4.4%) and magnesium (1.5%). Aluminium can also be alloyed with titanium to produce very strong, lightweight metals.

Copper is an excellent electrical conductor, which makes it ideal for use in electric wires. Good ductility also makes it suitable for pipes. Copper is widely used in alloys, notably brass (copper and zinc) and bronze (copper and tin, and sometimes lead).

Silver is a precious metal - a reference to its high cost. It is a better electrical conductor than any other material, so it is often used for electronic connections. Another precious metal - gold - is also an excellent conductor, and is highly corrosion-resistant.

Non-ferrous metals can be used to protect steel from corrosion by plating it- that is, covering it with a thin layer of metal. An example is galvanizing (zinc plating).

Steel can be hot-dip galvanized, by placing it in molten (liquid) zinc. It can also be electrogalvanized, which is a type of electroplating. With this technique, the steel component is placed in a liquid (often an acid)- called the electrolyte- and connected to the negative terminal (-) of an electrical supply, to become the cathode (the negative side). A piece of zinc is also placed in the electrolyte, and is connected to the positive terminal (+) of the supply. This then becomes the anode (the positive side). An electric current then flows between the pieces of metal, through the electrolyte. This causes a chemical reaction, which deposits zinc
on the cathode, plating the component.

A related process, called anodizing, is used to protect aluminium. The component to be anodized is connected to the positive terminal (to become the anode) and placed in an electrolyte, with a cathode. As electricity flows, aluminium oxide is deposited on the anode. As this is harder than aluminium metal, it provides protection.

5.Составьте предложения:

Duralium	can be mixed with copper to make	silver.
Titanium	resists corrosion better than the other precious metal,	brass.
Zinc	has a high strength-to-weight ratio and is often alloyed with	aluminium.
Copper	is an aluminium alloy that also contains copper and	bronze.
Gold	can be mixed with tin and lead to produce	magnesium.

Text 4

1.Прочитайте слова по транскрипции:
latex |ˈleɪtɛks|, polymer |ˈpɒlɪmə|, synthetic |sɪnˈθɛtɪk|, thermoplastic |θəːməʊˈplastɪk|.

2.Обратите внимание на перевод следующих слов и словосочетаний:
polymer - полимер;
rubber - резина; каучук;
natural polymer - натуральный полимер, природный полимер;
manmade - искусственный, созданный руками человека;
thermoplastic – термопластик;
mould - литейная форма;

solid material - монолитный материал, сплошной материал;
ABS - АБС-пластик;
polycarbonate - поликарбонат;
thermoset - отверждаемый материал;
epoxy resins - эпоксидные смолы;
polyimide - полимид;
engineering plastics - конструкционные пластики; конструкционные пластмассы;
elastomer - эластомер (вещество).

3.Прочитайте текст и переведите при помощи словаря незнакомые слова и словосочетания.

4.Прочитайте и переведите весь текст:

POLYMERS

With names such as polytetrafluoroethyline and polyethyleneteraphthalate, it's not surprising that polymers are usually called by their more common name, plastic. But what, exactly, is a polymer or a plastic?

Polymers are compounds made up of several elements that are chemically bound. Most compounds consist of large numbers of tiny molecules, which each contain just a few atoms. For example, a water molecule - H20- contains two hydrogen atoms and one oxygen atom. But the molecules of polymers contain huge numbers of atoms, joined together in long chains.

Rubber, thanks to its many uses from rubber bands to car tyres, is one of the best-known polymers. It comes from latex, a natural liquid which comes from rubber trees. Rubber is therefore a natural polymer. However, most of the polymers used in industry are not natural, but synthetic. The term 'plastic' is generally used to refer to synthetic polymers- in other words, those that are manmade.

Synthetic polymers can be divided into two main categories:

Thermoplastics can be melted by heat, and formed in shaped containers called moulds. After the liquid plastic has cooled, it sets to form a solid material. A thermoplastic is a type of plastic that can be heated and moulded numerous times. Examples of thermoplastics that are common in engineering include:

• ABS (acrylonitrile butadiene styrene)- stiff and light, used in vehicle bodywork
• polycarbonate - used to make strong, transparent panels and vehicle lights
• PVC (polyvinylchloride) -a cheaper plastic used for window frames and pipes.

Thermosetting plastics, also called thermosets, can be heated and moulded like

thermoplastics. They may also be mixed from cold ingredients. However, during cooling or mixing, a chemical reaction occurs, causing thermosets to cure. This means they set permanently, and cannot be moulded again. If a thermoset is heated after curing, it will burn. Examples of thermosets used in engineering are:

• epoxy resins- used in very strong adhesives
• polyimides- strong and flexible, used as insulators in some electric cables.

Two more categories of polymer are engineering plastics and elastomers. Engineering plastics are mostly thermoplastics that are especially strong, such as ABS and polycarbonate. Elastomers are very elastic polymers which can be stretched by force to at least twice their original length, and can then return to their original length when the force is removed.

5. Выберите нужное слово, чтобы закончить текст:

A lot of rubber is made from latex, a (1) *natural/synthetic* polymer which comes from rubber trees. However, not all rubber comes from trees. Synthetic rubber is a (2) *manmade/natural* polymer with similar properties to latex. Plastics are also polymers. Like rubber, they consist of long chains of (3) *atoms/molecules* which form extremely large (4) *atoms/molecules*.

TOPIC 7. MATERIAL PROPERTIES

Text 1

1.Обратите внимание на перевод следующих слов и словосочетаний:
tensile strength - растягивающее усилие, предел прочности при отрыве;
tension - напряжение, напряжённость, натянутость;
compression - сжатие;
stretching forces - сила растяжения, сила натяжения;
crushing forces - разрушающие нагрузки;
extension - вытягивание;
elongation - вытягивание; удлинение;
resist - сопротивляться, противиться;
compressive strength - компрессионная прочность, прочность на сжатие.

2.Прочитайте текст и переведите при помощи словаря незнакомые слова и словосочетания.

3.Прочитайте и переведите весь текст:

TENSILE STRENGTH AND DEFORMATION

When materials are exposed to forces, such as tension (stretching forces ~0~) and compression (crushing forces ~0~), they deform- that is, they change shape. The type of deformation depends on the type of force that is applied.

When a material is subjected to tension, its length will increase by a certain amount. This is called extension or elongation. It is especially important to understand the performance of materials in tension, as their tensile strength (ability to resist tension) is usually lower than their compressive strength (ability to resist compression).

Text 2

1.Обратите внимание на перевод следующих слов и словосочетаний:
elasticity - эластичность; упругость;
elastic material - упругий материал;
elastically deformed - упруго деформированный;
stiff - жёсткий;
brittle - хрупкий, ломкий;
significantly - значительно;
hammering - ковка;
rolling - прокатка;
malleable - ковкий;
ductile – пластичный.

2.Прочитайте текст и переведите при помощи словаря незнакомые слова и словосочетания.

3.Прочитайте и переведите весь текст:

ELASTICITY AND PLASTICITY

Some materials can extend significantly, but still return to their original shape. A material's ability to do this is called elasticity. Rubber is an example of a very elastic material- it can be elastically deformed to a considerable extent.

If a material has very low elasticity, and is strong, engineers say it is stiff. If a material has low elasticity and is weak, it is described as brittle- that is, it fractures (breaks, due to tension) very easily. Glass is an example of a brittle material.

Some materials can change shape significantly, but do not return to their original shape. We say these materials are plastic. Often, plasticity is described in specific terms. A material that can be plastically deformed by hammering or rolling- for example, lead (Pb)- is malleable. A material that can be drawn out (stretched) into a long length- for example, copper (Cu)- is ductile.

Text 3

1.Обратите внимание на перевод следующих слов и словосочетаний:
tensile testing - испытание на растяжение;
sample - образец;
bar - брусок, болванка (металла);
tensile force - растягивающая сила, сила растяжения;
limit of proportionality - предел упругости;
elastic limit - предел упругости;
yield point - предел вынужденной эластичности, точка текучести;
ultimate tensile strength - предельная прочность при растяжении;
fracture point - излом;

2.Прочитайте текст и переведите при помощи словаря незнакомые слова и словосочетания.

3.Прочитайте и переведите весь текст:

STAGES IN ELASTIC AND PLASTIC DEFORMATION

The graph below shows the typical extension behaviour of ductile materials in tensile testing - where a sample bar is subjected to a progressively increasing tensile force.

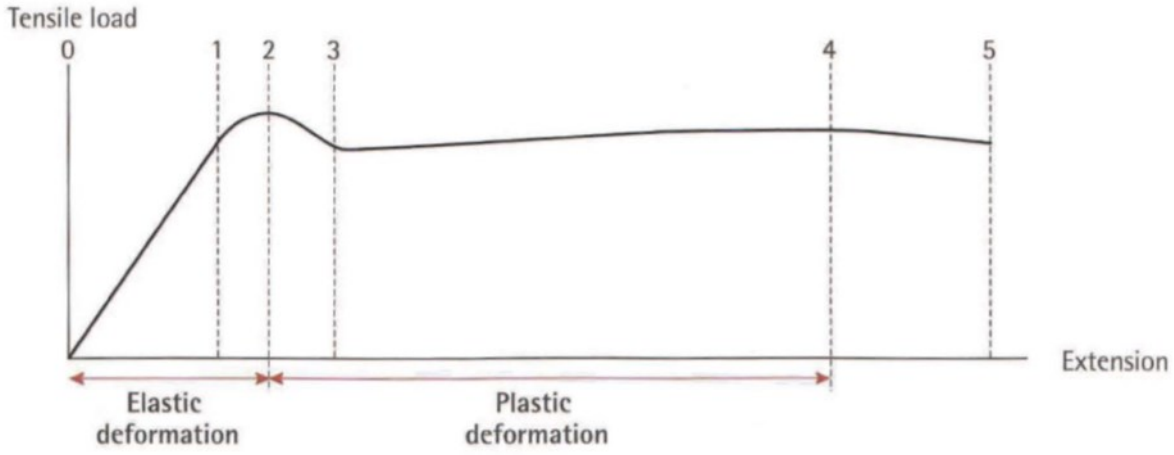

Points 0-1. The extension of the bar is proportional to the increase in tension. For example, when tension increases by 10%, length increases by 10%.
Point 1. The bar reaches the limit of proportionality. Beyond this point, length begins to increase at a slightly greater rate than tension.
Point 2. The elastic limit is reached. Beyond this point, the bar will no longer return to its original length. In many materials, the elastic limit occurs almost immediately after the limit of proportionality.
Point 3. The bar reaches its yield point. Once it yields, it continues to increase in length, even without a further increase in tension.
Point 4. This is the ultimate tensile strength (UTS) of the material. Beyond this point, a waist (a narrower section) appears at a point along the length of the bar, signalling that it is about to fracture.
Point 5 . This is the fracture point, where the bar breaks in two.

4. Дополните предложения словами: *compression, deformation, elongation, extension, tension*

1 A stretching force is called ..... .
2 A crushing force is called ..... .
3 Extension is also called ..... .
4 Tension causes ..... or ..... .
5 Tension or compression cause ..... .

Text 4

1.Обратите внимание на перевод следующих слов и словосочетаний:
hardness - прочность;
durability - выносливость, прочность;
scratch hardness - твёрдость по царапанью;
abrasion resistance - сопротивление истиранию;
indentation hardness - сопротивление вдавливанию;
impact - удар.

2.Прочитайте текст и переведите при помощи словаря незнакомые слова и словосочетания.

3.Прочитайте и переведите весь текст:

HARDNESS

The hardness of a material affects its durability- that is, how long it will last. Generally, hard materials are more durable than soft materials, because they are better at resisting wear progressively worsening damage - to their surfaces. Hardness can be defined in two main ways:

• Scratch hardness describes a material's ability to resist being scratched. Materials with a high degree of scratch hardness are said to have good abrasion resistance - they are good at resisting damage due to abrasion (the action of two surfaces being rubbed together).

• Indentation hardness describes a material's ability to resist indentations - that is, compressions in the surface of a material caused by impacts.

Text 5

1.Обратите внимание на перевод следующих слов и словосочетаний:

metal fatigue - усталость металла;
cyclic loads - циклическая нагрузка;
micro-cracking - образование микротрещин;
fatigue cracking - появление трещин от усталости;
fracture toughness - изломостойкость;
creep - ползучесть (металла).

2.Прочитайте текст и переведите при помощи словаря незнакомые слова и словосочетания.

3.Прочитайте и переведите весь текст:

FATIGUE, FRACTURE TOUHNESS AND CREEP

In aircraft construction, special attention must be paid to two materials problems that are well understood by mechanical and structural engineers. One is fatigue, often called metal fatigue in metals.

This problem is caused by cyclic loads- forces that continually vary. In aircraft, the wings are affected by cyclic loading as they frequently flex, continually bending up and down due to air turbulence. The consequence of fatigue is micro-cracking – the formation of cracks too small to see with the eye, and which worsen over time. The speed at which fatigue cracking progresses depends on the material's fracture toughness. This is a measure of how easily cracks that have already formed continue to open up and increase in length.

Another problem is creep - where components become permanently deformed (stretched, for example), due to loads. Creep increases over time. The problem is made worse by heat, so is a major issue in engines, where both loads and temperatures are high.

Text 6

1.Обратите внимание на перевод следующих слов и словосочетаний:
thermal conductor - материал повышенной теплопроводности;
thermal insulator - теплоизоляционный материал;
thermal expansion - тепловое расширение;
linear expansion - линейное расширение.

2.Прочитайте текст и переведите при помощи словаря незнакомые слова и словосочетания.

3.Прочитайте и переведите весь текст:

BASIC THERMAL PROPERTIES

Some materials conduct (carry or transmit) heat better than others. Therefore, thermal conductivity varies, depending on the material. Copper, for example, is an excellent thermal conductor. Polystyrene, on the other hand, is an excellent thermal insulator (and so a very poor thermal conductor).

As temperature increases, most materials expand (increase in size due to heating), and as temperature falls, they contract (decrease in size due to cooling). The extent to which expansion and contraction occur is measured by a material's coefficient of thermal expansion - that is, its change in size for a given change in temperature. The coefficient for aluminium, for example, is 0.000023. This means that for an increase in temperature of one degree Celsius, a one-metre length of aluminium will increase in length by 0.000023 metres. This figure can also be referred to as the coefficient of linear expansion, since it describes change in length (a linear measurement).

4. Дополните предложения словами: *abrasion, durability, durable, hard, indentation, scratch, soft*

The cutting wheel will be surrounded by transparent guards. These will allow the operator to see the cutting wheel at all times, and will shield the operator from flying metal fragments. The guards must therefore be constructed from material with a high degree of (1) ..... hardness, to protect it from impacts. As the guards will require

regular cleaning, the action of wiping away metal fragments will result in (2) ..... The guards must, therefore, have sufficient (3) ..... hardness in order to retain their transparency and ensure adequate (4) ..... .

TOPIC 8. FORMING, WORKING AND HEAT-TREATING METAL

Text 1

1.Обратите внимание на перевод следующих слов и словосочетаний:
casting - литье, отливка;
die - штамп (инструмент, металлическая форма для серийного изготовления изделий штамповкой, тиснением, давлением или чеканкой);
sintering - обжиг;
molten metal - жидкий металл, расплавленный металл;
solid mass - твёрдая масса;
extrusion - выдавливание (на прессе);
shaping tool - фасонный инструмент, строгальный резец, фасонный резец.

2.Прочитайте текст и переведите при помощи словаря незнакомые слова и словосочетания.

3.Прочитайте и переведите весь текст:

CASTING, SINTERING AND EXTRUDING METAL

Metal can be formed into shapes using heat and pressure. Casting involves heating metal until it becomes molten (liquid) and pouring it, or forcing it under pressure, into a mould called a die. Instead of being cast, metal components can be formed by sintering. This is done by using metal powder instead of molten metal. The powder is placed in a die and compressed into a solid mass. It is then heated (though not melted) until it becomes sintered - that is, the powder particles join together structurally, due to the heat.

Metal can also be shaped by extruding it into long lengths. Extrusion involves heating metal until it is molten, then forcing it at high pressure through a shaping tool- also called a die to form bars or tubes, for example. At the same time, the metal cools and becomes solid.

Text 2

1.Обратите внимание на перевод следующих слов и словосочетаний:
forge - кузница, горн;

hammering - ковка;
forging - ковка;
automated machines - станок-автомат;
drop forging - объёмная штамповка на падающем молоте;
hot rolled metal - горячекатаный металл;
cold rolled metal - холоднокатаный металл;
shot-peened - обдутый дробью.

2.Прочитайте текст и переведите при помощи словаря незнакомые слова и словосочетания.

3.Прочитайте и переведите весь текст:

WORKING METAL

Traditionally, many metal tools were made by heating iron bars in a fire, called a forge, until they were red hot or (hotter still) white hot. The metal was then worked- in other words, shaped by hammering it. Working metal using compression (for example, hammering) is also called forging. The same basic technique is still in use today, especially with steel. However, large, automated machines are now used. Metal is often worked (or forged) when hot (hot forged), but may also be worked when it is cold (cold forged).

A common forging technique is drop forging, where a heavy hammer is dropped onto a piece of metal. A die fixed to the hammer compresses the metal into the required shape. Rollers can also be used to apply compression, with or without heat, to produce hot rolled or cold rolled metal.

Forging also increases the hardness of metal. This is called work hardening. Metal becomes work hardened because its structure is changed by compression. The same result can be achieved without hammering or rolling - and therefore without changing the component's shape – by shot-peening. This involves firing small metal balls (metal shot) at the surface of components (when cold), at high speed. After components have been shot-peened, their surface is significantly harder.

Text 3

1.Обратите внимание на перевод следующих слов и словосочетаний:
heat treating - термическая обработка (металла);
quenching - закаливание, охлаждение;
annealing - прокалка;

tempering - закалка с последующим отпуском;
precipitation hardening - дисперсионное твердение;
case hardening - поверхностное упрочнение.

2.Прочитайте текст и переведите при помощи словаря незнакомые слова и словосочетания.

3.Прочитайте и переведите весь текст:

HEAT TREATING METAL

The properties of a metal can be changed by heat treating it- that is, heating and cooling the metal. The table below, from the technical information section of a steel supplier's website, summarizes the main types of heat treatment.

Type of heat treatment	Description of process	Properties of treated metal
quenching	Metal is heated, then dipped in water or oil to cool it rapidly.	**Quenched** metal is harder, but tends to be more brittle.
annealing	Metal is heated, then allowed to cool slowly.	**Annealed** metal is generally softer and more elastic.
tempering	Metal is heated and kept at a high temperature for a period of time.	**Tempered** metal possesses a balance between hardness and elasticity.
precipitation hardening (also called **age hardening**)	A process similar to tempering, but heat is maintained for longer.	**Precipitation-hardened** metal is harder than tempered metal.
case hardening (also called **surface hardening**)	Metal is heated in specific types of gas (not in air), causing its surface to absorb elements such as carbon.	Only the outer surface of **case-hardened** metal becomes harder.

4.Составьте предложения:

If a metal is precipitation hardened,	it is held at a high temperature for a time,	making it harder, but more brittle.
When metal is annealed,	it is heated with a gas	to improve its hardness without reducing its elasticity too much.
If metal is quenched, this means	it can also be described as age hardened,	to harden only the metal near the surface.
When a metal is tempered,	its temperature is allowed to decrease gradually,	because it is heated for a long time.
If a metal case is hardened,	its temperature is reduced rapidly,	in order to make it more elastic and less brittle

TOPIC 9. MATERIAL FORMATS

Text 1

1.Обратите внимание на перевод следующих слов и словосочетаний:
raw material - сырьё;
powder - порошок;
pellet - гранула;
fibre - волокно;
steel ingot - стальная болванка;
bloom - блюм (полупродукт металлургического производства — стальная заготовка сечения, близкого к квадратному, со стороной свыше 140 мм);
billet – плашка, брусок, заготовка, болванка;

2.Прочитайте текст и переведите при помощи словаря незнакомые слова и словосочетания.

3.Прочитайте и переведите весь текст:

RAW MATERIALS FOR PROCESSING

Generally, raw materials are materials which need to be processed before they are used - for example, melted and cast in a mould. Common formats of raw material are:

• powder: quantities of very fine (small) particles, such as cement powder
• pellets: larger, standard-sized pieces of material, typically pea-sized to egg-sized, intended to be melted for forming in moulds - for instance, plastic pellets
• fibres: very fine, hair-like lengths, such as glass fibres.

When steel and other metals are produced, they are made into blocks called ingots, which can subsequently be melted and cast. Very large steel ingots are called blooms. One standard size for steel blooms is 630 mm x 400 mm x 6 m. Steel can also be supplied in smaller blocks, of various sizes, called billets.

Text 2

1.Обратите внимание на перевод следующих слов и словосочетаний:
bar - брусок; болванка (металла);
rod - прут;
sheet - лист (бумаги, стекла, металла);
board – доска;

roll - рулон , бухта;
coil - бухта (каната, провода);
plate - плита (металла), лист;
structural steel section - стальные профили;
tube - труба;
hollow - пустой, полый;
solid - плотный, сплошной, цельный;
pipe - труба;
wire - проволока, провод;
cable - кабель;
insulation - изоляция;
solid wire - одножильный провод;
stranded wire - многопроволочный провод.

2.Прочитайте текст и переведите при помощи словаря незнакомые слова и словосочетания.

3.Прочитайте и переведите весь текст:

FORMATS OF PROCESSED MATERIALS

Materials are frequently supplied ready for use in the formats described below.

• Bars are long lengths of solid metal with a relatively small cross-sectional area. These can be round bars (or rods) which have a circular section. They may also be square bars, with a square section, and flat bars, with a flat, rectangular section. A bar is generally made of metal, but a rod can be made of any material.

• Sheets are flat, wide and thin - for steel, thinner than about 3 mm. Other materials supplied in sheets include plastic, glass and wood. However, sheets of wood are often called boards. When sheets of metal (or metal sheets) are delivered in large quantities, they can be supplied in rolls called coils.

• Plates are flat pieces of metal that are wide, but thicker than sheets (for steel, thicker than 3mm). Non-metals, such as glass, plastic or wood, are not usually called plates; even if these materials are thicker than 3 mm, they are usually called sheets.

• Structural steel sections are made from rolled or extruded steel, and produced in a variety of section shapes. I-sections, with profiles in the shape of the letter I, are common examples.

• Tubes are hollow, not solid. The most common types are round tubes, but square tubes and rectangular tubes are also produced. Pipes are specifically for carrying liquid or gas. A pipe is therefore just one type of tube.

• Wires are thin lengths of metal with circular sections, consisting of one strand - that is, a long, thin, single piece of material. They are usually supplied in coils. Several wires can be combined to form a cable. An electrical wire is a single conductor covered with insulation. The conductor can be a single wire (called a solid wire) or several strands of wire grouped together (called a stranded wire). An electrical cable has several conductors, separately covered with insulation, grouped within a second outer layer of insulation.

4.Скажите, являются ли данные утверждения верными (true or false)?

1 Raw materials are often intended to be melted or mixed.
2 Powder particles are smaller than pellets.
3 Pellets do not require further processing.
4 A steel bloom is a type of ingot.
5 Steel billets can be cut into smaller sized pieces called blooms.

TOPIC 10. MACHINING

Text 1

1.Обратите внимание на перевод следующих слов и словосочетаний:
machining - обработка на станке (механическая);
hole - отверстие;
groove - паз;
thread - резьба;
swarf - мелкая металлическая стружка;
chips - отходы, стружка;

2.Прочитайте текст и переведите при помощи словаря незнакомые слова и словосочетания.

3.Прочитайте и переведите весь текст:

MACHINING AND CNC

Machining is the use of machines to cut pieces of material (called workpieces) and shape them into components. The tools used in machining, to make holes, grooves, threads, etc., are called machine tools. Metal is often machined. As it is cut, waste is

produced, called swarf or chips. During machining, a liquid called cutting fluid may be pumped onto the workpiece to act as a coolant, keeping the workpiece cool.

In manufacturing, machining is usually guided by computers called computer numerical control (CNC) systems. Often, design information (on shapes and sizes of components) is fed directly into CNC systems from computer aided design I computer aided manufacturing (CAD/CAM) software.

Text 2

1.Обратите внимание на перевод следующих слов и словосочетаний:
milling - фрезерование;
milling machine - фрезерный станок;
turning - вращание;
circular cross-section - круговое сечение;
sawing - пиление;
band saw - ленточная пила;
power hacksaw - ножовочная пила;
drilling - сверление;
drill - сверло, бур;
drill bit - буровое долото, сверло;
holesaw - кольцевая пила (для прорезки отверстий);
core - сердцевина;
boring - сверление;
grinding - шлифование;
grinder - шлифовальный станок.

2.Прочитайте текст и переведите при помощи словаря незнакомые слова и словосочетания.

3.Прочитайте и переведите весь текст:

MACHINING WIH CUTTING TOOLS

Milling is cutting done by a milling machine, often using toothed cutting discs (wheels with teeth that have sharp edges). When a workpiece is milled, it is held in a fixed position on the machine, and is shaped by cutting tools which rotate (spin) while being moved over the surface of the workpiece.

Turning is a technique for cutting components that have a circular cross-section. The workpiece is turned by a machine called a lathe, which rotates the workpiece. A fixed machine tool is then moved against the rotating workpiece to cut material from it.

Sawing is cutting using a blade (a thin, sharp piece of metal), which usually has teeth, to remove a thickness of material slightly wider than the blade. The gap left by the blade, along the line of the cut, is called a kerf. Machines that use toothed blades include circular saws, which have rotating circular blades, band saws, and power hacksaws. A hacksaw has a blade with very small teeth, for cutting metal. Saws may also use abrasive wheels - that is, thin, circular cutting wheels with rough, hard surfaces - often made of industrial diamond.

Drilling is a technique for cutting circular holes. A machine called a drill is fitted with a tool called a drill bit (or bit). The bit rotates and drills into the material. Holes with large diameters can be cut using holesaws- hollow cylinders with teeth, which saw circular cuts and remove a core (a solid cylinder) of material. When used to drill into concrete, this technique is also called core drilling, or diamond drilling, as the holesaws have industrial diamond edges. Usually, drilling refers to making new holes. In machining, enlarging a hole (making it wider) is called boring.

Grinding is removing material across a surface area, using abrasive wheels. The machines used to grind materials with abrasive wheels are called grinders.

4.Соедините две части предложений:

1 A drill bit is an example of
2 Material being machined is called
3 The waste metal produced during machining is called
4 Metal gets hot during cutting, so cutting fluid can be used as
5 A computer that guides a machining process is called
6 Drawings can be produced and transferred to the machining process using

a CAD/CAM software.
b a CNC system.
c a machine tool.
d a workpiece.
e swarf or chips.
f a coolant.

5.Используйте эти слова, чтобы дополнить предложения: *drill, grind, mill, turn, saw*

1 Lathes are designed to ..... workpieces.
2 Different bits are designed to ..... into different types of material.

3 When you ..... a workpiece, the cutting blade removes a thickness of material to form a kerf.
4 Abrasive wheels ..... material.
5 On some machines, toothed cutting wheels can be used to ..... any part of a workpiece, in order to form its final shape.

Text 3

1.Обратите внимание на перевод следующих слов и словосочетаний:
shear force - срезывающая сила;
guillotine - гильотинные ножницы;
punch - пресс;
blank - болванка;
blanking - штамповка (технический способ обработки металла давлением)

2.Прочитайте текст и переведите при помощи словаря незнакомые слова и словосочетания.

3.Прочитайте и переведите весь текст:

GUILLOTINING AND PUNCHING

Thin materials can be cut by applying pressure in order to shear them - that is, cut them with a scissoring force (in engineering, called a shear force). Sheets of metal can be sheared using a machine called a guillotine, which has a long blade. Usually, sheets are guillotined when long, straight cuts are required.

Small shapes, such as circles, can be sheared from sheets using a machine called a punch, which pushes a die (a shaped tool) through the sheet. The shaped piece of metal that is punched from the sheet is called a blank. If the blank is the finished product, this process is called blanking. If the sheet itself, with holes made in it, is the finished product, the process is called piercing.

Text 4

1.Обратите внимание на перевод следующих слов и словосочетаний:
flame-cutting - газопламенная резка;
torch - сварочная горелка;
electrical discharge machining - электроискровая обработка (металлов);
electric arc - электрическая дуга;

plasma torch - плазменная горелка;

2.Прочитайте текст и переведите при помощи словаря незнакомые слова и словосочетания.

3.Прочитайте и переведите весь текст:

HIGH-TEMPERATURE METAL CUTTING TECHNIQUES

Flame-cutting generally uses oxygen (02) and acetylene (C2H2). The two gases are blown through a torch - basically a tube - as a mixture called oxyacetylene. The acetylene burns in the oxygen to produce a flame hot enough to melt steel.

Electrical discharge machining (EDM) - also called spark erosion - involves passing a tight length of wire through a workpiece, similar to the way thin wire is used to cut cheese. However, the wire does not actually touch the workpiece. Instead, a high-voltage current produces an electric arc, which 'jumps' across a small gap between the wire and the workpiece. As the current arcs, it generates heat, which melts the metal ahead of the wire.

Plasma cutting uses a plasma torch to blow out gas at high pressure. The gas argon (Ar) is often used. At the same time a high-voltage current is passed through the plasma torch, and arcs between the torch and the workpiece. This ionizes some of the atoms in the gas, changing it to plasma. As the plasma is heated by the arc, it reaches an extremely high temperature - much hotter than would be possible for a gas that had not been ionized.

Text 5

1.Обратите внимание на перевод следующих слов и словосочетаний:
laser beam - лазерный луч;
laser cutting - лазерная резка;
waterjet cutting - резание с помощью водяной струи.

2.Прочитайте текст и переведите при помощи словаря незнакомые слова и словосочетания.

3.Прочитайте и переведите весь текст:

LASER CUTTING AND UHP WATERJETS

Laser beams (concentrated light) can cut materials accurately, in small quantities, by melting them. Laser cutting is especially suitable for plastics.

Ultra-high-pressure (UHP) waterjets- jets of water fired at extremely high pressure - can cut almost any material, including metal. An advantage of UHP waterjet cutting is that the edge quality of workpieces is high- that is, the cut edges are smooth. This means that no secondary operations- further processes to smooth rough edges- are required. Also, because UHP waterjets are cold, they do not leave a heat-affected zone (HAZ) on the workpiece that is, an area near the cut edge whose properties have been changed by heat.

4.Ответьте на вопросы:
1 In machining, what does EDM stand for?
2 What alternative term can be used instead of EDM?
3 What type of tool is used in both flame-cutting and plasma cutting?
4 What source of heat is used in both EDM and plasma cutting?
5 What needs to happen to a gas in order to turn it into plasma?
6 What term refers to concentrated light that can be hot enough to cut material?
7 What term refers to an area of material that has been changed by high temperature?

TOPIC 11. NON-MECHANICAL JOINTS

Text 1

1.Обратите внимание на перевод следующих слов и словосочетаний:
welding - сваривание;
filler - наплавочный материал;
discontinuity - разрывность;
residual stress - остаточное действующее напряжение;
weld zone - зона сварки.

2.Прочитайте текст и переведите при помощи словаря незнакомые слова и словосочетания.

3.Прочитайте и переведите весь текст:

WELDING

Welding means permanently joining two pieces of material by heating the joint between them. The heat melts the edges of the components being welded together, and once the material has become molten (liquid), fusion occurs. When the joint fuses,

material from each component is mixed together, joining to form a solid weld. Metal is often welded. It is also possible to weld plastic.

Welding is usually used to join components of the same base metal- that is, the metal the components are made of. It is possible - though more difficult - to weld certain dissimilar materials. For example, copper can be welded to steel. Often, a filler is added during welding. This is new material, of the same type as the base metal, which is melted into the weld pool - the molten metal at the joint during welding.

One problem in welding is discontinuity, where joints are not completely solid. Another problem is residual stress. This is force- for example, tension- which is 'trapped' around the joint. This problem occurs after welding, as a result of contraction in the weld zone (or fusion zone) -the area that was the weld pool. It can also occur in the heat-affected zone (HAZ) -the material close to the weld pool which was subjected to high temperature, and was modified by the heat.

TEXT 2

1.Обратите внимание на перевод следующих слов и словосочетаний:
shielded metal arc welding - дуговая сварка плавящимся электродом в защитной атмосфере;
arc welding - электродуговая сварка;
stick welding - дуговая сварка плавящимся покрытым электродом;
flux - огнеупор (контактирующий с расплавом);
shielding gas - защитная атмосфера;
gas metal arc welding - дуговая сварка металла в защитной атмосфере;
oxyfuel - кислородное топливо;
gas fuel - газообразное топливо;
consumable electrode - плавящийся электрод;
weld pool - сварочная ванна;
gas tungsten arc welding - газ-вольфрамовая дуговая сварка;
Metal Inert Gas - газ, инертный к металлу.

2.Прочитайте текст и переведите при помощи словаря незнакомые слова и словосочетания.

3.Прочитайте и переведите весь текст:

COMMON GAS AND ARC WELDING TECHNIQUES

Shielded metal arc welding (SMAW), generally called arc welding or stick welding, involves striking an electric arc between the workpiece and an electrode – an electrical conductor. The heat from the arc melts the base metal. The electrode consists of a welding rod – a stick of metal of the same type as the workpiece – which provides filler. The welding rod is therefore consumable - it is used up. The rod is also coated with a material called flux. When heated, this produces a shielding gas, which protects the molten metal from oxygen. Without this gas, the hot metal would combine with the oxygen in the air, and this would weaken the weld.

In gas welding, heat comes from a torch which burns oxyfuel - a mixture of oxygen (02) and a gas fuel. The gas fuel burns much hotter in oxygen than it would in the air. The most common fuel is acetylene (C2H2) called oxyacetylene when mixed with oxygen. Welding rods provide filler but flux is not required, as the burning oxyfuel produces carbon dioxide (C02) which acts as a shielding gas.

In gas metal arc welding (GMAW) - often called MIG welding (Metal Inert Gas) - an arc is struck between the workpiece and a wire which is made of the same metal as the base metal. The wire acts as a consumable electrode, supplying filler. A shielding gas, often argon (Ar), is blown onto the weld pool.

In gas tungsten arc welding (GTAW)- often called TIG welding (Tungsten Inert Gas) – an arc comes from an electrode made of tungsten (W). However, the tungsten is non-consumable -it does not melt, and is not consumed as filler during the welding process. A separate welding rod is used to supply filler, if required. As with MIG welding, a shielding gas such as argon is blown onto the weld.

4.Используйте эти слова, чтобы дополнить текст: *base, discontinuities, dissimilar fuse, heat –affected, materials, metal, molten, pool, residual, stresses, together weld, welded, zone*

It is possible for components made of different metals to be (1). For instance, steel can be welded to copper and to brass. However, it is much more difficult to weld components made of two (2) than it is to weld those made of the same (3). While there is no difficulty in melting two different metals and mixing them together in a (4) state, problems occur once the hot, liquid metal forming starts to cool. As this process takes place, the two metals will not necessarily (6) properly. Once the joint has cooled, this can result in (7), such as cracks, at the heart of the (8) In addition, as the metals contract at different rates (due to different coefficients of thermal expansion), powerful (9) can build up, not only in the joint, but also in the wider (10) near the joint.

Text 3

1.Обратите внимание на перевод следующих слов и словосочетаний:
resistance welding - контактная электросварка;
spot welding - точечная сварка;
seam welding - шовная сварка;
ultrasonic welding - ультразвуковая сварка.

2.Прочитайте текст и переведите при помощи словаря незнакомые слова и словосочетания.

3.Прочитайте и переведите весь текст:

SPECIALIZED WELDING TECHNIQUES

Resistance welding involves passing an electric current through metal components that are touching. This heats the metal and welds it. The technique can be used for spot welding - welding a number of small points between the surfaces of the components. It can also be used for seam welding, to make long, narrow welds.

Ultrasonic welding uses high-frequency acoustic vibrations (sound vibrations) to make the touching surfaces of two components vibrate. This generates friction, heating them and fusing them. The technique is often used to weld plastics.

Text 4

1.Обратите внимание на перевод следующих слов и словосочетаний:
brazing - пайка среднеплавким припоем;
soldering - спаивание;
soft soldering - низкотемпературная пайка;
soldering iron – паяльник.

2.Прочитайте текст и переведите при помощи словаря незнакомые слова и словосочетания.

3.Прочитайте и переведите весь текст:

BRAZING AND SOLDERING

In brazing, brass- an alloy of copper (Cu) and zinc (Zn)- is melted using an oxyfuel torch, and added as filler to form the joint. Unlike welding, the base metal of the

components is not melted, so the components are not fused. Brazed joints are therefore not as strong as welded joints.

For some pipe joints and for electrical connections, soldering is often used. Solder is a metal filler which melts at quite a low temperature. Like brazing, soldering forms joints without melting the base metal. Soldered joints are therefore weaker than welds, and also generally weaker than brazed joints. In soft soldering, an alloy- of tin (Sn) and lead (Ph), or of tin and copper - is melted using an electrically heated rod called a soldering iron. In hard soldering, a solder containing copper and silver (Ag) produces slightly stronger joints. The higher melting point of silver means a flame - usually from an oxyfuel torch - is used instead of a soldering iron.

Text 5

1.Обратите внимание на перевод следующих слов и словосочетаний:
adhesive - клейкий или вязкий материал;
solvent - растворитель;
epoxy resins - эпоксидные смолы.

2.Прочитайте текст и переведите при помощи словаря незнакомые слова и словосочетания.

3.Прочитайте и переведите весь текст:

ADHESIVE

Adhesive - called glue in everyday language -can be used to bond (permanently join) components together. Its purpose is to adhere to the surfaces being joined, to create a bond between them. Most adhesives are liquids, which can be applied to (put on) the surfaces that need to be glued together.

Adhesives can create adhesion between surfaces in two main ways. One is by allowing wet adhesive to be absorbed by the components. After drying and hardening, this forms a mechanical bond, as adhesive is anchored into each component's substrate (the material below the surface). Adhesion may also be created by a chemical bond, from a chemical reaction between the adhesive and the materials.

Many types of adhesive harden by drying. They contain a solvent- water or a liquid chemical -which gives a workable mixture. After the adhesive has been applied, the solvent evaporates - turns from a liquid to a gas - to leave solid adhesive. An example of this type is polyvinyl adhesive (PVA), a wood glue. Other types, such as epoxy resins,

are two-part adhesives, supplied as separate chemicals in two containers. When mixed and applied, the two parts react, then cure- harden due to a chemical reaction.

Contact adhesives must be applied to both components, then left to dry for a time before the surfaces are brought together. A bond then occurs when the surfaces touch.

4. Дополните предложения, выбрав нужное слово:

1 Surfaces can be glued together by applying different types of (adhesive/ adhesion).
2 When adhesive-covered surfaces touch, they (adhere to/apply to) each other.
3 If an adhesive reacts with the material which the components are made from, it forms a (chemical bond/mechanical bond) with the material.
4 An adhesive that is applied to the surfaces of both components, then allowed to dry before they are joined, is called a (contact adhesive/two-part adhesive).
5 In order to form an effective mechanical bond, an adhesive must be absorbed quite deeply into the (solvent/substrate) of the material.
6 When two-part adhesives are mixed, they react chemically, which enables them to (cure/evaporate) and form a hard, strong material.

TOPIC 12. MANUFACTURING

Text 1

1.Обратите внимание на перевод следующих слов и словосочетаний:
Sumerians - Шумеры (название ранней цивилизации);
Lascaux - Ласко (палеолитическая пещера близ г. Монтиньяк, на Ю. Франции);
cuneiform script - шрифт клинописи;
incision - насечка;
lathe - станок;
screw thread - резьба;
batch - партия.

2.Прочитайте текст и переведите при помощи словаря незнакомые слова и словосочетания.

3.Прочитайте и переведите весь текст:

A BRIEF HISTORY OF MANUFACTURING

Manufacturing dates back to the period 5000-4000 B.C., and thus, it is older than recorded history, the earliest forms of which were invented by the Sumerians around 3500 B.C. Primitive cave drawings, as well as markings on clay tablets and stone, needed some form of a brush and some sort of "paint," as in the prehistoric cave paintings in Lascaux, France, estimated to be 16,000 years old; some means of scratching the clay tablets and baking them, as in cuneiform scripts and pictograms of 3000 B.C.; and simple tools for making incisions and carvings on the surfaces of stone, as in the hieroglyphs in ancient Egypt.

The manufacture of items for specific uses began with the production of various household artifacts, which were typically made of either wood, stone, or metal. The materials first used in making utensils and ornamental objects included gold, copper, and iron, followed by silver, lead, tin, bronze (an alloy of copper and tin), and brass (an alloy of copper and zinc). The processing methods first employed involved mostly casting and hammering, because they were relatively easy to perform. Over the centuries, these simple processes gradually began to be developed into more and more complex operations, at increasing rates of production and higher levels of product quality. Note, for example, that lathes for cutting screw threads already were available during the period from 1600 to 1700, but it was not until some three centuries later that automatic screw machines were developed.

Although ironmaking began in the Middle East in about 1100 B.C., a major milestone was the production of steel in Asia during the period 600-800 A.D. A wide variety of materials continually began to be developed. Today, countless metallic and nonmetallic materials with unique properties are available, including engineered materials and various advanced materials. Among the available materials are industrial or high-tech ceramics, reinforced plastics, composite materials, and nanomaterials that are now used in an extensive variety of products, ranging from prosthetic devices and computers to supersonic aircraft.

Until the Industrial Revolution, which began in England in the 1750s and is also called the First Industrial Revolution, goods had been produced in batches and required much reliance on manual labor in all phases of their production. The Second Industrial Revolution is regarded by some as having begun in the mid-1900s with the development of solid-state electronic devices and computers.

Mechanization began in England and other countries of Europe, basically with the development of textile machinery and machine tools for cutting metal. This technology soon moved to the United States, where it continued to be further developed.

A major advance in manufacturing occurred in the early 1800s with the design,

production, and use of interchangeable parts, conceived by the American manufacturer and inventor Eli Whitney (1765-1825). Prior to the introduction of interchangeable parts, much hand fitting was necessary because no two parts could be made exactly alike. By contrast, it is now taken for granted that a broken bolt can easily be replaced with an identical one produced decades after the original. Further developments soon followed, resulting in countless consumer and industrial products that we now cannot imagine being without.

Text 2

1.Обратите внимание на перевод следующих слов и словосочетаний:
computer-aided engineering - компьютерное моделирование;
paperless design - безбумажный проект;

2.Прочитайте текст и переведите при помощи словаря незнакомые слова и словосочетания.

3.Прочитайте и переведите весь текст:

ROLE OF COMPUTERS IN PRODUCT DESIGN

Typically, product design first requires the preparation of analytical and physical models of the product for the purposes of visualization and engineering analysis. Although the need for such models depends on product complexity, constructing and studying these models have become highly simplified through the use of computer-aided design (CAD) and computer-aided engineering (CAE) techniques.

CAD systems are capable of rapid and complete analyses of designs, whether it be a simple shelf bracket or a shaft in large and complex structures. The Boeing 777 passenger airplane, for example, was designed completely by computers in a process known as paperless design, with 2000 workstations linked to eight design servers. Unlike previous mock-ups of aircraft, no prototypes or mock-ups were built and the 777 was constructed and assembled directly from the CAD/CAM software that had been developed.

Through computer-aided engineering, the performance of structures subjected, for example, to static or fluctuating loads or to temperature gradients also can be simulated, analyzed, and tested, rapidly and accurately. The information developed is stored and can be retrieved, displayed, printed, and transferred anytime and anywhere within a company's organization. Design modifications can be made and optimized (as

is often the practice in engineering, especially in the production of large structures) directly, easily, and at any time.

Computer-aided manufacturing involves all phases of manufacturing, by utilizing and processing the large amount of information on materials and processes gathered and stored in the organization's database. Computers greatly assist in organizing the information developed and performing such tasks as programming for numerical control machines and for robots for material-handling and assembly operations, designing tools, dies, molds, fixtures, and work-holding devices, and maintaining quality control.

On the basis of the models developed and analyzed in detail, product designers then finalize the geometric features of each of the product's components, including specifying their dimensional tolerances and surface-finish characteristics. Because all components, regardless of their size, eventually have to be assembled into the final product, dimensional tolerances are a major consideration in manufacturing. Indeed, dimensional tolerances are equally important for small products as well as for car bodies or airplanes. The models developed also allow the specification of the mechanical and physical properties required, which in turn affect the selection of materials.

Text 3

1.Обратите внимание на перевод следующих слов и словосочетаний:
prototype - прототип;
casting - отливка;
forming - формовка;
machining - механическая обработка;
rapid-prototyping technique - технология быстрого прототипирования;
virtual prototyping - виртуальное прототипирование.

2.Прочитайте текст и переведите при помощи словаря незнакомые слова и словосочетания.

3.Прочитайте и переведите весь текст:

PROTOTYPES

A prototype is a physical model of an individual component or product. The prototypes developed are carefully reviewed for possible modifications to the original design, materials, or production methods. An important and continuously evolving technology is rapid prototyping. Using CAD/CAM and various specialized technologies,

designers can now make prototypes rapidly and at low cost, from metallic or nonmetallic materials such as plastics and ceramics.

Prototyping new components by means of traditional methods (such as casting, forming, and machining) could cost an automotive company hundreds of millions of dollars a year, with some components requiring a year or more to complete. Rapid prototyping can significantly reduce costs and the associated product-development times. Rapid-prototyping techniques are now advanced to such a level that they also can be used for low-volume (in batches typically of fewer than 100 parts) economical production of a variety of actual and functional parts to be assembled into products.

Virtual prototyping is a software-based method that uses advanced graphics and virtual-reality environments to allow designers to view and examine a part in detail. This technology, also known as simulation-based design, uses CAD packages to render a part such that, in a 3-D interactive virtual environment, designers can observe and evaluate the part as it is being drawn and developed. Virtual prototyping has been gaining importance, especially because of the availability of low-cost computers and simulation and analysis tools.

Text 4

1.Обратите внимание на перевод следующих слов и словосочетаний:

green design - экологическое проектирование;
discard - отходы;
air fleet - воздушный флот;
slag - выгар;
foundry - литьё;
hazardous waste - опасные отходы;
lubricant - смазка;
coolant - охлаждающее вещество;
solvent - растворитель;
furnace - печь (техническая);
design for the environment - проектирование для окружающей среды (Программа, разработанная в 1992 г. Агентством по окружающей среды США, предназначенная для снижения общего антропогенного воздействия на окружающую среду и здоровье человека);
design for recycling - технология проектирования с учётом возможностей повторного использования или утилизации.

2.Прочитайте текст и переведите при помощи словаря незнакомые слова и словосочетания.

3.Прочитайте и переведите весь текст:

GREEN DESIGN AND MANUFACTURING

In the United States alone, 9 million passenger cars, 300 million tires, 670 million compact fluorescent lamps, and more than 5 billion kilograms of plastic products are discarded each year. Every three months, industries and consumers discard enough aluminum to rebuild the U.S. commercial air fleet. Note that, as indicated subsequently, the term discarding implies that the products have reached the end of their useful life; it does not necessarily mean that they are wasted and dumped into landfills.

The particular manufacturing process and the operation of machinery can each have a significant environmental impact. Manufacturing operations generally produce some waste, such as:

a. Chips from machining and trimmed materials from sheet forming, casting, and molding operations.
b. Slag from foundries and welding operations.
c. Additives in sand used in sand-casting operations.
d. Hazardous waste and toxic materials used in various products.
e. Lubricants and coolants in metalworking and machining operations.
f. Liquids from processes such as heat treating and plating.
g. Solvents from cleaning operations.
h. Smoke and pollutants from furnaces and gases from burning fossil fuels.

The adverse effects of these activities, their damage to our environment and to the Earth's ecosystem, and, ultimately, their effect on the quality of human life are now widely recognized and appreciated. Major concerns involve global warming, greenhouse gases (carbon dioxide, methane, and nitrous oxide), acid rain, ozone depletion, hazardous wastes, water and air pollution, and contaminant seepage into water sources. One measure of the adverse impact of human activities is called the carbon footprint, which quantifies the amount of greenhouse gases produced in our daily activities.

The term green design and manufacturing is now in common usage in all industrial activities, with a major emphasis on design for the environment (DFE). Also called environmentally conscious design and manufacturing, this approach considers all possible adverse environmental impacts of materials, processes, operations, and products, so that they can all be taken into account at the earliest stages of design and production.

These goals, which increasingly have become global, also have led to the concept of design for recycling (DFR). Recycling may involve one of two basic activities:

Biological cycle: Organic materials degrade naturally, and in the simplest version, they lead to new soil that can sustain life. Thus, product design involves the use of (usually)

organic materials. The products function well for their intended life and can then be safely discarded.

Industrial cycle: The materials in the product are recycled and reused continuously. For example, aluminum beverage cans are recycled and reused after they have served their intended purpose. To demonstrate the economic benefits of this approach, it has been determined that producing aluminum from scrap, instead of from bauxite ore, reduces production costs by as much as 66% and reduces
energy consumption and pollution by more than 90%.

One of the basic principles of design for recycling is the use of materials and product-design features that facilitate biological or industrial recycling. In the U.S. automotive industry, for example, about 75% of automotive parts (mostly metal) are now recycled, and there are continuing plans to recycle the rest as Well, including plastics, glass, rubber, and foam. About 100 million of the 300 million discarded automobile tires are reused in various ways.

Text 5

1.Обратите внимание на перевод следующих слов и словосочетаний:

materials engineer - инженер по материалам;
shape-memory alloy - сплав с эффектом запоминания формы.

2.Прочитайте текст и переведите при помощи словаря незнакомые слова и словосочетания.

3.Прочитайте и переведите весь текст:

SELECTION OF MATERIALS

An increasingly wide variety of materials are now available, each type having its own material properties and manufacturing characteristics, advantages and limitations, material and production costs, and consumer and industrial applications. The selection of materials for products and their components is typically made in consultation with materials engineers, although design engineers may also be sufficiently experienced and qualified to do so. At the forefront of new materials usage are industries such as the aerospace and aircraft, automotive, military equipment, and sporting goods industries.

The general types of materials used, either individually or in combination with
other materials, are the following:

- Ferrous metals: carbon, alloy, stainless, and tool and die steels.

- Nonferrous metals: aluminum, magnesium, copper, nickel, titanium, superalloys, refractory metals, beryllium, zirconium, low-melting-point alloys, and precious metals.
- Plastics (polymers): thermoplastics, thermosets, and elastomers.
- Ceramics, glasses, glass ceramics, graphite, diamond, and diamond-like materials.
- Composite materials: reinforced plastics and metal-matrix and ceramic-matrix composites.
- Nanomaterials.
- Shape-memory alloys (also called smart materials), amorphous alloys, semiconductors, and superconductors.

Text 6

1.Обратите внимание на перевод следующих слов и словосочетаний:
extrusion - выдавливание (на прессе);
powder metallurgy - порошковая металлургия;
molding - литьё;
broaching - протягивание;
ultrasonic machining - ультразвуковая обработка (материалов);
ultraprecision - особо высокой точности;
honing - хонингование;
lapping - полирование, доводка;
polishing - полировка;
burnishing - сглаживание, шлифование;
deburring - удаление заусенцев;
coating - нанесение покрытия;
plating - нанесение гальванического покрытия;
microfabrication - микрообработка;
nanofabrication - нанопроизводство;
lithography - литография;

2.Прочитайте текст и переведите при помощи словаря незнакомые слова и словосочетания.

3.Прочитайте и переведите весь текст:

SELECTION OF MANUFACTURING PROCESSES

As will be described throughout this text, there is often more than one method that can be employed to produce a component for a product from a given material The following broad categories of manufacturing methods are all applicable to metallic as well as nonmetallic materials:

a. Casting
b. Forming and shaping: rolling, forging, extrusion, drawing, sheet forming, powder metallurgy, and molding.
c. Machining: turning, boring, drilling, milling, planing, shaping, broaching; grinding; ultrasonic machining; chemical, electrical, and electrochemical machining; and high-energy-beam machining. This broad category also includes micromachining for producing ultraprecision parts.
d. Joining: welding, brazing, soldering, diffusion bonding, adhesive bonding, and mechanical joining.
e. Finishing: honing, lapping, polishing, burnishing, deburring, surface treating, coating, and plating.
f. Microfabrication and nanofabrication: technologies that are capable of producing parts with dimensions at the micro (one-millionth of a meter) and nano (one-billionth of a meter) levels; fabrication of microelectromechanical systems (MEMS) and nanoelectromechanical systems (NEMS), typically involving processes such as lithography, surface and bulk micromachining, etching, LIGA, and various specialized processes.

The selection of a particular manufacturing process or, more often, sequence of processes, depends on the geometric features of the parts to be produced, including the dimensional tolerances and surface texture required, and on numerous factors pertaining to the particular workpiece material and its manufacturing properties. To emphasize the challenges involved, consider the following two cases:

a. Brittle and hard materials cannot be shaped or formed without the risk of fracture, unless they are performed at elevated temperatures, whereas these materials can easily be cast, machined, or ground.
b. Metals that have been preshaped at room temperature become less formable during subsequent processing, which, in practice, is often required to complete the part; this is because the metals have become stronger, harder, and less ductile than they were prior to processing them further.

TOPIC 13. MACHINING PROCESSES

Text 1

1.Обратите внимание на перевод следующих слов и словосочетаний:
lathe - токарный станок;
jaw chucks - кулачковый патрон;
reaming - расширение;
taper turning - точение конических поверхностей;
knurling - накатка.

2.Прочитайте текст и переведите при помощи словаря незнакомые слова и словосочетания.

3.Прочитайте и переведите весь текст:

LATHE MACHINE

Lathe is an important and widely used machine tool used in the machining process. Sometimes it is called as mother of all other machine tools. The main function of the lathe machine is to remove excess material from the job and give it require size and dimensions. Lathe rotates the work piece about an axis. The job is inserted between the jaw chucks of lathe and then turning operation is done by a single point cutting tool. The excess material s removed by the single point cutting tool in the form of chips. Work piece is fixed in jaws and rotates about their axis. Feed is provided to the cutting tool as per requirement. Rotation is provided to the work piece by electric motor or engine at specific rpm. By using lathe we can perform various operations like drilling, turning, reaming, boring, taper turning, knurling, thread cutting and grinding etc.

These days we use different types of lathe according to our requirement. Lathes are manufactured in different types and sizes; lathe can be very small in size for small operations to huge in sizes used for turning large diameter shafts. All lathes which we used have almost same function and operations. Following are the different types of lathe we use in industry as per requirements.

Text 2

1.Обратите внимание на перевод следующих слов и словосочетаний:
engine lathe - токарно-винторезный станок;
centre lathe - центровой токарный станок;
bed - станина;

headstock - головка;
tailstock - упор, натяжное устройство;
gear - зубчатая передача;
belt drive - ремённой привод;
speed lathe - быстроходный токарный станок;
feed mechanism - подающий механизм;
bench lathe - верстачный токарный станок, настольный токарный станок;
tool room lathe - инструментальный станок;
limit gauge - ограничительный калибр;
turret lathe - токарно-револьверный станок;
turret - револьверный супорт;
automatic lathe - автоматический токарный станок;
wheel lathe - колесотокарный станок;
gap bed lathe - токарный станок с выемкой в станине;
duplicate lathe - сдвоенный станок;
T-lathe - лоботокарный станок.

2.Прочитайте текст и переведите при помощи словаря незнакомые слова и словосочетания.

3.Прочитайте и переведите весь текст:

TYPES OF LATHE MACHINE

Centre or engine lathe is oldest and very common type of lathe. It is widely used machine tool in industry and its main function is to manufacture cylindrical profiles. The basic parts of the centre lathe are bed, headstock and tailstock. It has durable headstock and that can drive the lathe at different speeds with the help of some mechanisms. In very early days when no electric motor used this was driven by steam engines that's why it is called as engine lathe also but now days power is transmitted to lathe by electric motors with the help of some gears and belt drives. We can adjust the speed of lathe by using gears and belt drives. Engine lathes can easily feed the cutting tool in both directions i.e. longitudinal and lateral directions with the help of feed mechanisms.

Speed lathe works at very high speed as name suggest. Its headstock spindle is rotates at very high speed. Speed lathe is very simple and basic type of lathe having basic parts like bed, headstock, tailstock but it has no feed mechanism. Feed is provided by manually of hand operated. This type of lathe is used where less cutting force is required or we can say that it is used to machine soft materials. It is used for spinning, centering, polishing and machining of wood etc.

Bench lathe is mounted on a bench. It is generally a small type of lathe. It has also same parts like headstock, tail stock and can perform same functions as engine lathe but mainly used for working on small and precious parts.

Tool room lathe works on different ranges of speeds it can be operates on high rpm as well as low rpm as per requirements. Its parts are almost same similar to engine lathe but the parts are built very accurately and should be arranged in proper sequence because this lathe is used for highly precious work with very less tolerances. Tool room lathes are used for precious work on tools where dimensional accuracy should be maintained, dies, limit gauges and machining of those parts which requires more accuracy with minimum tolerances.

Turret lathe is the modified version of engine lathe. It is an example of advancement of technology in manufacturing industry. Older lathes have some draw back i.e. they cannot use in mass production and can performs only single operation at a time but after the invention of turret lathe we can easily do mass production. Construction of turret lathe is similar to engine lathe but difference is the tail stock of an engine lathe is replaced by a hexagonal turret on which multiple tools are fitted. These tools are capable in performing multiple tasks like turning, boring, thread cutting, drilling and facing. By using these tools we can easily perform different type of operations on a single work piece without changing of tool and work piece.

Automatic lathe works automatically. Standard lathes have some draw backs i.e. they are not used for mass production. But automatic lathes are used for mass production. Some mechanisms are responsible for the automation in it. In fully automatic lathes the job handling and tool changing is automatic but in semiautomatic tool changing is done manually but job handling movements are automatic. These types of lathes are high speed and heavy duty.

Computerized controlled lathes are widely used lathe in present time because of its working. It is most advance type of lathe this time. CNC is the example of this kind of lathes. CNC stands for Computerized numerically controlled. These lathes are fully automatic can works on some programs feed into the computer or we can say that it uses computer programs to control the machine tool. Once the program is feed in to the computer a large number of parts of same kind can be machined with very high speed and accuracy. Pre-programmed computer software is responsible for the all process from tool changing to replacing new work piece with old one all functions done automatically. A semi-skilled worker can easily operate this after initial setup is done. These types of lathes are used for mass production. Components manufactured by these lathes are very accurate in dimensional tolerances.

These types of lathes are used for some special purposes as per their name. These are used to machine those components which cannot be machined by standard lathes. The

types of lathe which comes in this category are wheel lathe, gap bed lathe, tracer/duplicate lathe and T-lathe.

Wheel lathe is used for machining of journals and rail rods. It is also used for turning the threads on locomotive wheels.

Gap bed lathe is used to machine large diameter work piece i.e. up to 1.5 to 2 meters and 6-8 meters in length.

T-shape lathe is used to machine rotors used in jet engines and gas turbines. The shape of its bed in T that's why it is called as T-shaped lathes.

Duplicate or tracer lathe is used for duplicating or making replica of the shape. This lathe can machine different type of contours. It traces the shape of one component and makes a replica of same contour. Numerically controlled lathes
are the modified version of Duplicate lathes.

Text 3

1.Обратите внимание на перевод следующих слов и словосочетаний:
bed - стол (станка);
carriage - супорт;
cross-slide - вертикальный суппорт;
compound rest - верхний суппорт;
tool post - резцедержатель;
apron - фартук (станка);
facing - защитная облицовка;
lead screw - ходовой винт;
headstock - передняя бабка (станка);
pulleys - ролик;
V-belts - клиновидный приводной ремень;
spindle - вал;
set of gears - набор зубчатых колёс;
tailstock - натяжное устройство;
reamer - развёртка;
tailstock quill - пиноль задней бабки;
feed rod - ходовой валик;
friction clutch - муфта трения;
keyway - кнопочный паз;
chip pan - стружкосборник;
split nut - обхватная гайка.

2.Прочитайте текст и переведите при помощи словаря незнакомые слова и словосочетания.

3.Прочитайте и переведите весь текст:

LATHE COMPONENTS

Bed. The bed supports all major components of the lathe. Beds have a large mass and are built rigidly, usually from gray or nodular cast iron. The top portion of the bed has two ways with various cross sections that are hardened and machined for wear resistance and dimensional accuracy during turning. In gap-hed lathes, a section of the bed in front of the headstock can be removed to accommodate larger diameter workpieces.

Carriage. The carriage, or carriage assembly, slides along the ways and consists of an assembly of the cross-slide, tool post, and apron. The cutting tool is mounted on the tool post, usually with a compound rest that swivels for tool positioning and adjustment. The cross-slide moves radially in and out, controlling the radial position of the cutting tool in operations such as facing. The apron is equipped with mechanisms for both manual and mechanized movement of the carriage and the cross-slide by means of the lead screw.

Headstock. The headstock is fixed to the bed and is equipped with motors, pulleys, and V-belts that supply power to a spindle at various rotational speeds. The speeds can be set through manually controlled selectors or by electrical controls. Most headstocks are equipped with a set of gears, and some have various drives to provide a continuously variable range of speed to the spindle. Headstocks have a hollow spindle to which work-holding devices are mounted and long bars or tubing can be fed through them for various turning operations. The accuracy of the spindle is important for precision in turning, particularly in high-speed machining; preloaded tapered or ball bearings typically are used to rigidly support the spindle.

Tailstock. The tailstock, which can slide along the ways and be clamped at any position, supports the other end of the workpiece. It is equipped with a center that may be fixed (dead center), or it may be free to rotate with the workpiece (live center). Drills and reamers can be mounted on the tailstock quill (a hollow cylindrical part with a tapered hole) to drill axial holes in the workpiece.

Feed Rod and Lead Screw. The feed rod is powered by a set of gears through the headstock. The rod rotates during the lathe operation and provides movement to the carriage and the cross-slide by means of gears, a friction clutch, and a keyway along the length of the rod. Closing a split nut around the lead screw engages it with the carriage; the split nut is also used for cutting threads accurately.

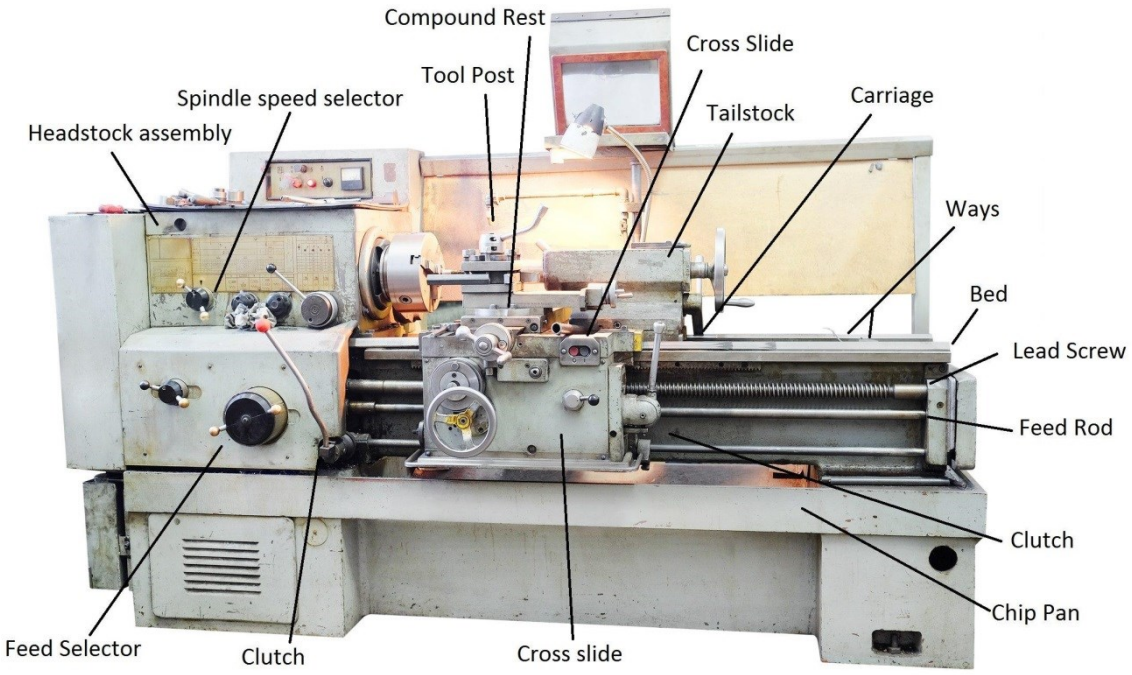

Text 4

1.Обратите внимание на перевод следующих слов и словосочетаний:
boring - растачивание;
facing - защитная облицовка;
chamfering - закругление;
boring bar - шпиндель расточного станка (выдвижной);
bore - отверстие (образованное сверлом);
chatter - нестабильная вибрация;
boring mill - токарно-карусельный станок;
milling cutter - фрезерный резец.

2.Прочитайте текст и переведите при помощи словаря незнакомые слова и словосочетания.

3.Прочитайте и переведите весь текст:

BORING AND BORING MACHINES

Boring enlarges a hole made previously by some other process or produces circular internal profiles in hollow workpieces. The cutting tools are similar to those used in turning and are mounted on a boring bar to reach the full length of the bore. The boring bar must be sufficiently stiff to minimize tool deflection and thus maintain dimensional accuracy and avoid vibration and chatter. For this reason, a material with a high elastic

modulus (such as tungsten carbide) is desirable. Boring bars have been designed and built with capabilities for damping vibration.

Boring operations on relatively small workpieces can be carried out on lathes; large workpieces are machined on boring mills. These machine tools are either horizontal or vertical and are capable of performing various operations, such as turning, facing, grooving, and chamfering. In horizontal boring machines, the workpiece is mounted on a table that can move horizontally in both the axial and radial directions. The cutting tool is mounted on a spindle that rotates in the headstock, which is capable of both vertical and longitudinal movements. Drills, reamers, taps, and milling cutters also can be mounted on the machine spindle.

A vertical boring mill is similar to a lathe, has a vertical axis of workpiece rotation, and can accommodate workpieces with diameters as much as 2.5 m.

The cutting tool is usually a single point, made of M2 or M3 high-speed steel or P10 (C7) or P01 (CS) carbide. It is mounted on the tool head, which is capable of vertical movement (for boring and turning) and radial movement (for facing), guided by the cross-rail. The head can be swiveled to produce conical (tapered) holes. Cutting speeds and feeds for boring are similar to those for turning.

Boring machines are available with a variety of features. Machine capacities range up to 150 kW and are available with computer numerical controls, allowing all movements of the machine to be programmed. Little operator involvement is required, and consistency and productivity are improved.

Text 5

1.Обратите внимание на перевод следующих слов и словосочетаний:

drilling machines - сверлильный станок;
tapping - нарезание резьбы;
ream - рассверлить;
drill press - вертикально-сверлильный станок;
adjustable table - перестанавливаемый стол (в станке);
vise - зажимное приспособление;
handwheel - маховик (ручной);
counterboring - рассверливание.

2.Прочитайте текст и переведите при помощи словаря незнакомые слова и словосочетания.

3.Прочитайте и переведите весь текст:

DRILLING MACHINES

Drilling machines are used for drilling holes, tapping, reaming, and small-diameter boring operations. The most common machine is the drill press. The workpiece is placed on an adjustable table, either by clamping it directly into the slots and holes on the table or by using a vise, which in turn is clamped to the table. The drill is lowered manually by a handwheel or by power feed at preset rates. Manual feeding requires some skill in judging the appropriate feed rate.

Drill presses usually are designated by the largest workpiece diameter that can be accommodated on the table and typically range from 150 to 1250 mm. In order to maintain proper cutting speeds at the cutting edges of drills, the spindle speed on drilling machines has to be adjustable to accommodate different drill sizes. Adjustments are made by means of pulleys, gearboxes, or variable-speed motors.

The types of drilling machines range from simple bench-type drills used to drill small-diameter holes to large radial drills, which can accommodate large workpieces. The distance between the column and the spindle center can be as much as 3 m. The drill head of universal drilling machines can be swiveled to drill holes at an angle. Developments in drilling machines include numerically controlled three-axis machines, in which the operations are performed automatically and in the desired sequence with the use of a turret. Note that the turret holds several different drilling tools.

Drilling machines with multiple spindles (gang drilling) are used for high-production-rate operations. These machines are capable of drilling, in one cycle, as many as 50 holes of varying sizes, depths, and locations. They also are used for reaming and counterboring operations. However, with advances in machine tools, gang-drilling machines are now being replaced with numerical-control turret drilling machines. Special drilling machines, such as those which produce holes in continuous hinges (piano hinges), use twist drills 1 mm in diameter. These machines usually are horizontal and produce holes in up to 3-m long segments in one cycle.

Workholding devices for drilling are essential to ensure that the workpiece is located properly. They also keep the workpiece from slipping or rotating during drilling. Workholding devices are available in various designs; the important features are three-point locating for accuracy and three-dimensional work holding for secure fixtures.

Text 6

1.Обратите внимание на перевод следующих слов и словосочетаний:

milling machine - фрезерная машина;

knee milling machine - консольно-фрезерный станок;

planer-type milling machine - продольно-фрезерный станок;
rotary-table machine - станок с поворотным столом.

2.Прочитайте текст и переведите при помощи словаря незнакомые слова и словосочетания.

3.Прочитайте и переведите весь текст:

MILLING MACHINES

Because they are capable of performing a variety of cutting operations, milling machines are among the most versatile and useful machine tools. The first milling machine was built in 182.0 by Eli Whitney (1765-1825). A wide selection of milling machines with numerous features is now available. The features of typical standard milling machines are described next. Note, however, that many of these machines and operations are now being replaced with computer controls and machining centers. Inexpensive, manually controlled machines are still widely used, especially for small production runs.

Plain milling machines have three axes of movement, with the motion usually imparted manually or by power. In universal column-and-knee milling machines, the table can be swiveled on a horizontal plane. In this way, complex shapes (such as helical grooves at various angles) can be machined to produce parts such as gears, drills, taps, and cutters.

Bed-type Milling Machines. In bed-type machines, the worktable is mounted directly on the Cutters bed, which replaces the knee and can move only longitudinally. These machines are Spindle Carrier not as versatile as other types, but they have high stiffness and typically are used for high-workpiece production work. The spindles may be horizontal or vertical and of duplex or triplex types (with two or three spindles, respectively), for the simultaneous machining of two or three workpiece surfaces.

Several other types of milling machines are available. Planer-type milling machines, which are similar to bed-type machines, are equipped with several heads and cutters to mill different surfaces. They are used for heavy workpieces and are more efficient than simple planers when used for similar purposes.

Rotary-table machines are similar to vertical milling machines and are equipped with one or more heads for face-milling operations.

Milling machines have been rapidly replaced by computer numerical-control (CNC) machines for all but the lowest production quantities. These machines are versatile and capable of milling, drilling, boring, and tapping with repetitive accuracy. Also available

are profile milling machines, which have five axes of movement; note the three linear and two angular movements of the machine components.

Text 7

1.Обратите внимание на перевод следующих слов и словосочетаний:

capstan lathe - револьверный станок;
turret lathe - токарно-револьверный станок;
turret - револьверный супорт;
saddle - поворотная платформа;
ram - поршень;
feed stop screws - упор для автоматического выключения подачи.

2.Прочитайте текст и переведите при помощи словаря незнакомые слова и словосочетания.

3.Прочитайте и переведите весь текст:

DIFFERENCE BETWEEN CAPSTAN AND TURRET LATHE

Capstan and turret lathes are semiautomatic lathes. Semiautomatic means machining is done automatically but some other functions like changing of job/work piece and setting of tools are done manually. These are the modified version of engine lathe. It is an example of advancement of technology in manufacturing industry. Construction of turret/capstan lathes is similar to engine lathe but difference is they have an axially movable index able turret having hexagonal shape in place of tail stock on which multiple tools are fitted. These tools are capable in performing multiple tasks like turning, boring, thread cutting, drilling and facing. By using these tools we can easily perform different type of operations on a single work piece without changing of tool and work piece. All these tools are mounted on a hexagonal turret; turret is rotates after each operation. Turret lathe is used for mass production and the advantage of this lathe is a less skilled operator can perform work on it once all setup is done properly. These types of lathes can be used for machining large work piece also. These lathes are relatively costlier than engine lathe because of their complex construction. Using these lathes a single type of job can be easily repetitive manufacture with less effort and time or we can say that both the lathes are used for mass production.

Both turret and capstan lathes are similar in construction, operation and in some applications also but the major differences between them are as follow:

	Turret lathe	Capstan lathe
1	In turret lathe the main turret is directly installed on the saddle and the saddle is move along the entire length of the lathe bed.	Capstan lathe is ram type turret lathe and the movement of the ram is limited.
2	In turret lathe the turret tool head is directly mounted on the saddle and they appear like a single unit.	Turret head is mounted on a slide called as ram which is mounted on the saddle in case of capstan lathes.
3	In turret lathe saddle is moved for providing feed to the tool.	But in case of capstan lathe saddle is fixed at a point but ram is moved.
4	Saddle is move along the entire length so it is used to machining of large work pieces.	The short strokes of the ram have some limitations so this lathe is used to machining of small work piece only.
5	It has slower operation because of heavy weight of all the components.	It has fast working operations because lighter in construction.
6	In turret lathe limit dogs are used to control the movement of the tool.	In case of capstan lathe feed stop screws are provided at the rear side of the turret for controlling the tool movement.
7	It is used to machine large work piece so large depth of cut and feed is provided for machining.	Relatively less feed and depth of cut are provided for machining because used for small work pieces.
8	In turret lathes external threads are generally cut by a single point or a multipoint chasing tool which is installed on the front slide and moved by a short lead screw and a swing type half nut.	But in case of capstan lathe external threads are cut using a self-opening die which is mounted on the one face of the turret.
9	Turret lathe is mostly single spindle and horizontal type lathe but may be vertical and multi spindle type in some cases.	But the capstan lathe is usually single spindle and horizontal axis type only.
10	In turret lathes power operated jaw chucks are used to hold the work piece.	In case of capstan lathe hand operated collect chucks are used for holing the work piece.

ЛИТЕРАТУРА

1) Долматовская Е.Ю. Изобретения и изобретатели: учеб.-справ. пособие для изучющих англ.яз. – М.:АСТ:Астрель; Владимир: ВКТ, 2008. – 128с.:ил.
2) Парахина А.В. Пособие по переводу технических текстов с английского языка на русский: Для сред.спец.учеб. заведений.- 2-е изд., испр. – М.: Высш. школа, 1979. – 160с.:ил.
3) Смекаев В. П. Учебник технического перевода (английский язык). Н. Новгород: НГЛУ им Н.А. Добролюбова, Вектор ТиС, 2006. — 316 с.
4) Macmillan Guide to Science: Student's Book. - Oxford : Macmillan Publishers limited, 2008. - 127 p. : il.
5) Manufacturing engineering and technology. Serope Kalpakjian. Steven R. Schmid. – Pearson, 2014 Professional English in use.
6) Engineering: Student's Book. – Cambridge University Press, 2009. – 144p.: il.

Интернет-ресурсы

7) Universe Today www.universetoday.com
8) Design & Technology http://www.bbc.co.uk
9) History http://www.bbc.co.uk
10) Production Engineering http://www.mech4study.com